Curtis & Tompkins Laboratories

FULL SERVICE ENVIRONMENTAL ANALYTICAL TESTING

Soil Gas Sampling with a Helium Leak Detection Shroud

Bruce Godfrey & Stefan D'Angona

The oldest Testing Lab in the US

In 1878… Curtis & Tompkins began as a laboratory analyzing wine samples for export…

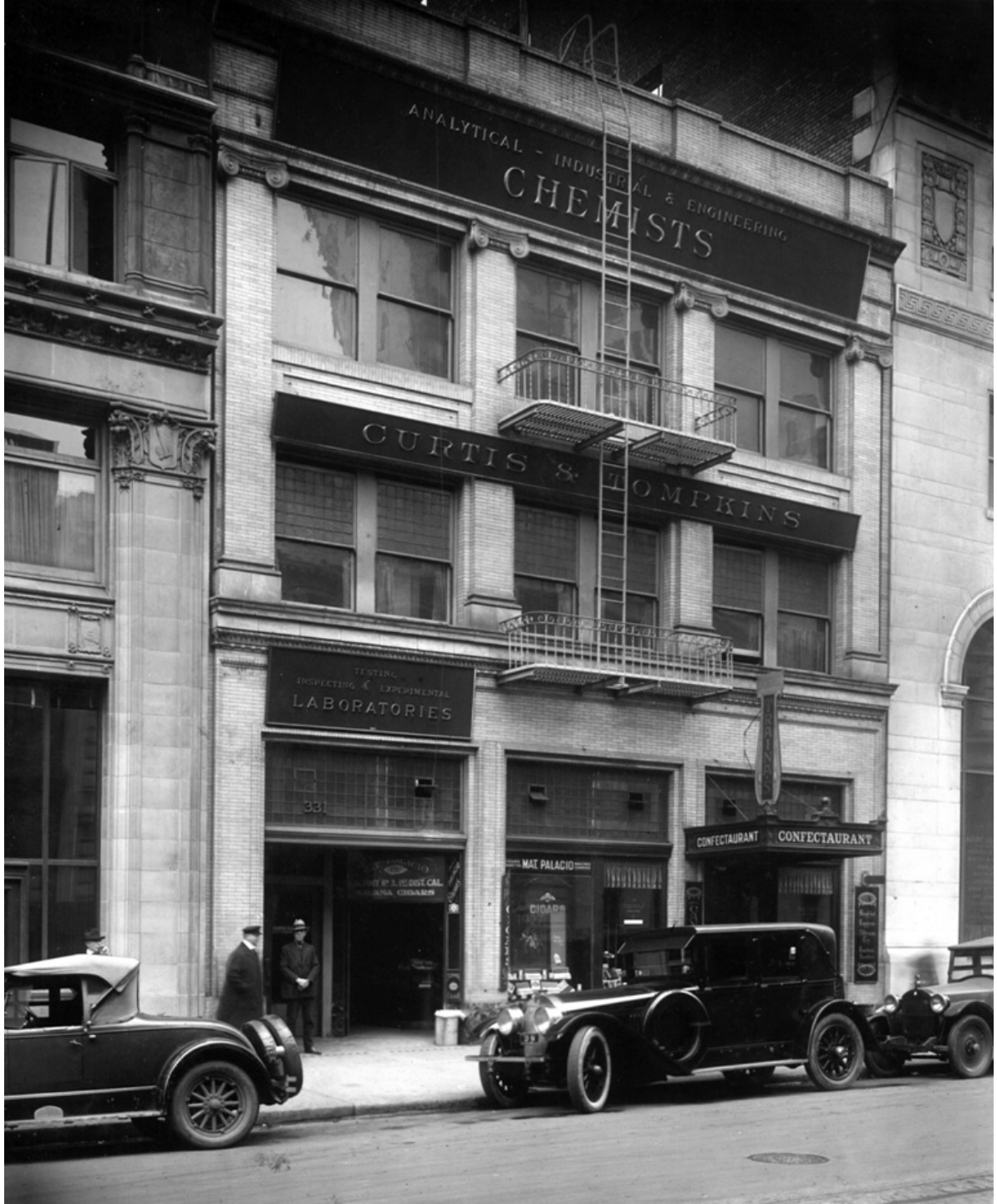
ANALYTICAL - INDUSTRIAL & ENGINEERING
CHEMISTS
CURTIS & TOMPKINS
TESTING
INSPECTING & EXPERIMENTAL
LABORATORIES
331
CONFECTAURANT
CONFECTAURANT
MAT. PALACIO
CIGARS

Introduction

a. Leak Detection Options

b. Helium Leak Detection

c. Leak Tracer System Design

d. Use and experience

Why Leak Check?

Proof of Sample Integrity

Leaks result in sample dilution

- Leaks in Train Fittings
- Down Well Leaks

Leak Testing Options

- Liquid Tracer
  - 2-Propanol (IPA)
    - Qualitative, interferes, raises RL's
- Helium
  - Quantitative, no interference
  - "Pain in the neck"

Helium Advantages

- Frequently used for leak detection in manufacturing
- Inert, doesn’t interfere with target compounds
- Easily Measurable
- Allows estimate of dilution

The Sampling Train

- Compression Fittings
  - Assembled, cleaned, and disassembled
- Filters and Restrictors
- Active Sites
- QC Testing
  - Blanks and Calibration Standards

Soil Gas Sample Train

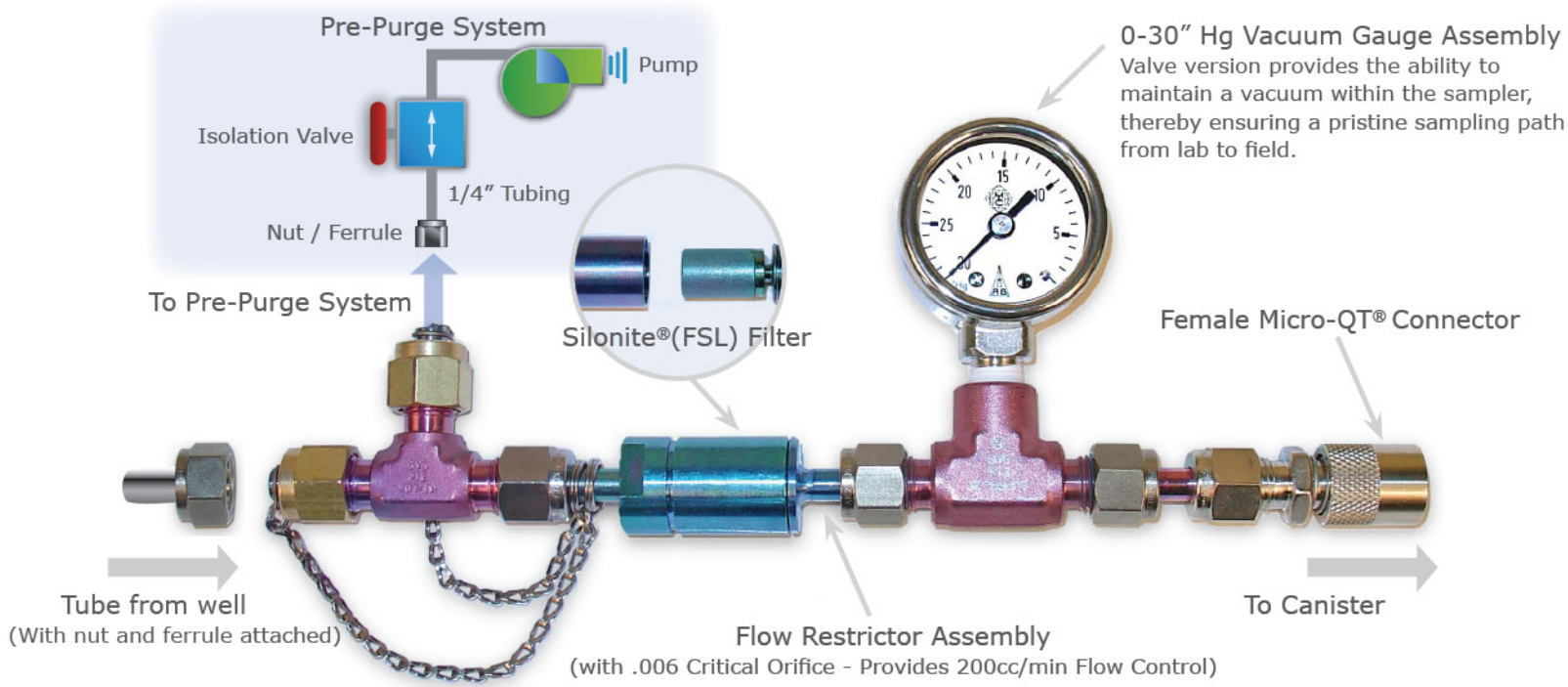

Sampling Train Prep

- Assembly: Critical Orifice
- Leak Testing
  - *He Charge & leak detector check fittings*
  - *Vacuum Decay Testing*
- Verify flow rate
- Clean train: Nitrogen flow, 60C, 2hrs
- Fill clean canister with air through train & test canister contents to List and DL's
- Verify train performance with Calibration Standard

Why Build & Rent He Shrouds?

- Our clients asked us
- Design using best available technology
- Lab resources required
  - cleaning, maintenance, testing, validation

Design Considerations

- DTSC Guidance compliant
- Size & Weight: Easy packaging and transport
- Provide “leak tight” trains to field
- Minimize number of field tubing connections
- *Real Time* leak detection before sampling
- Minimize false positives and negative target determinations
- “Scalable” ….12 wells sampled in 8 hours
- Low Cost
- Simple to Use

Helium Detectors

- Flow Through and Diffusion Cell
  - Diffusion Detector inside shroud
  - Flow Thru Detector in purge line
- Small, lightweight, portable, simple
- Battery Powered
- Quick, Accurate, Precise

Curtis & Tompkins Laboratories

FULL SERVICE ENVIRONMENTAL ANALYTICAL TESTING

Helium Detectors

Canister Fill Times

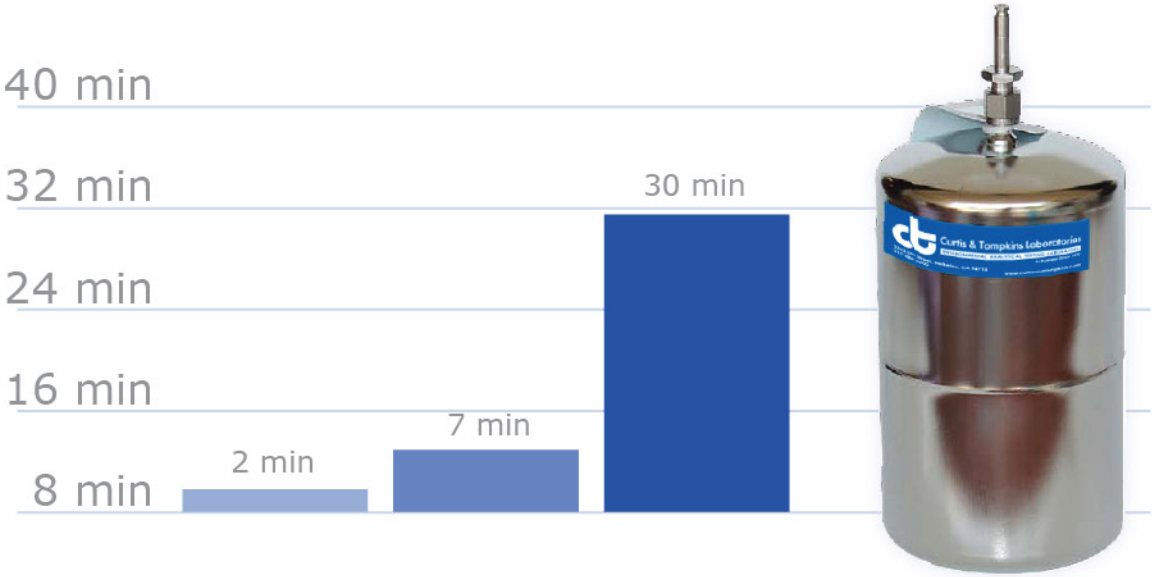

Sample Size Issues

Representative Sample Size?

Sample Homogeneity

First Sniff ?

Costs

- Shroud equipment rental adds $70 per sample for 8 wells
- $235 for the first sample
- Additional field labor costs
- What circumstances justify extra costs for a QC procedure?

Curtis & Tompkins Laboratories

FULL SERVICE ENVIRONMENTAL ANALYTICAL TESTING

Shroud Components

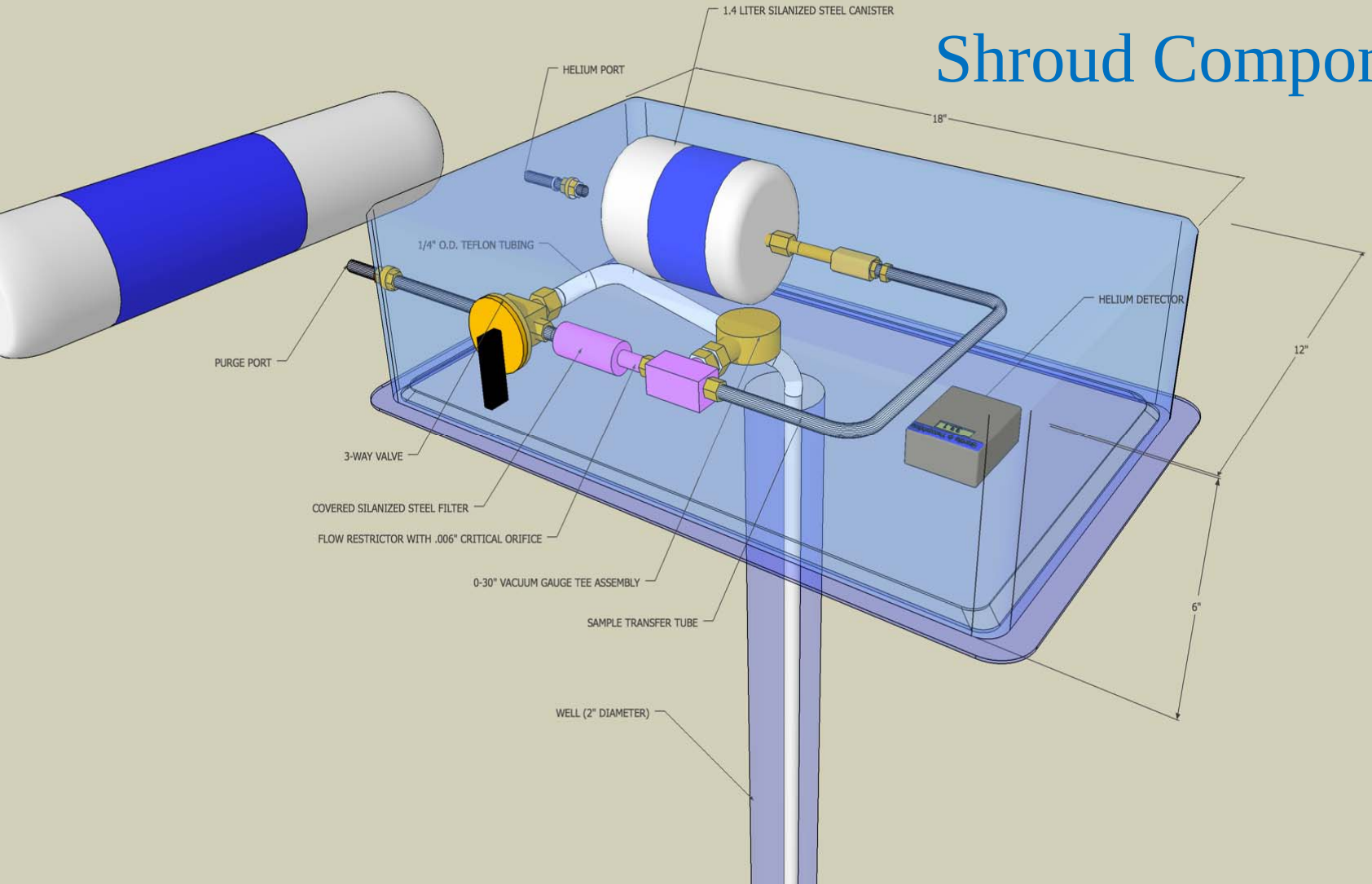

Curtis & Tompkins Laboratories

FULL SERVICE ENVIRONMENTAL ANALYTICAL TESTING

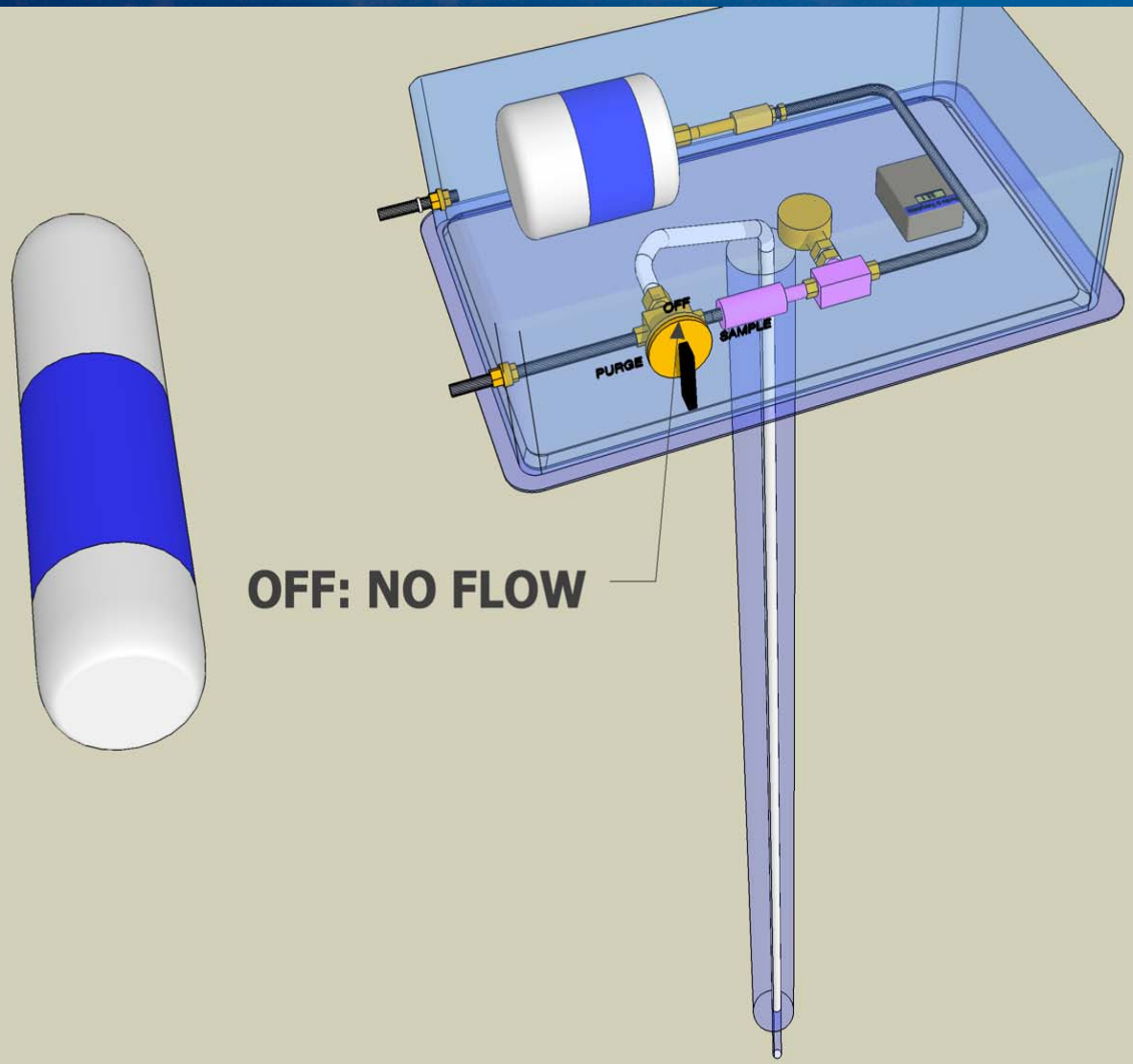

OFF: NO FLOW

Curtis & Tompkins Laboratories

FULL SERVICE ENVIRONMENTAL ANALYTICAL TESTING

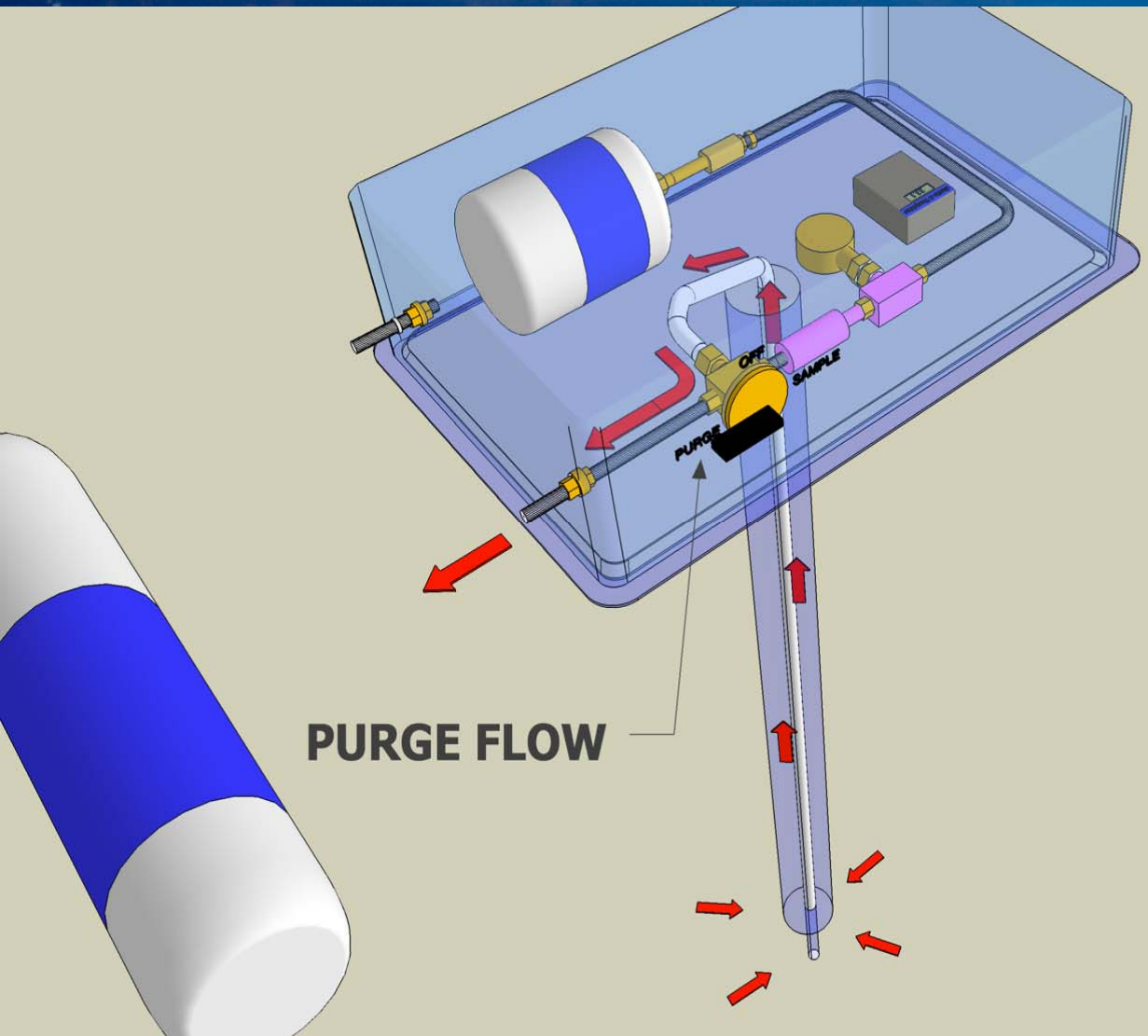

Curtis & Tompkins Laboratories

FULL SERVICE ENVIRONMENTAL ANALYTICAL TESTING

Purge Test with In Line He Detector

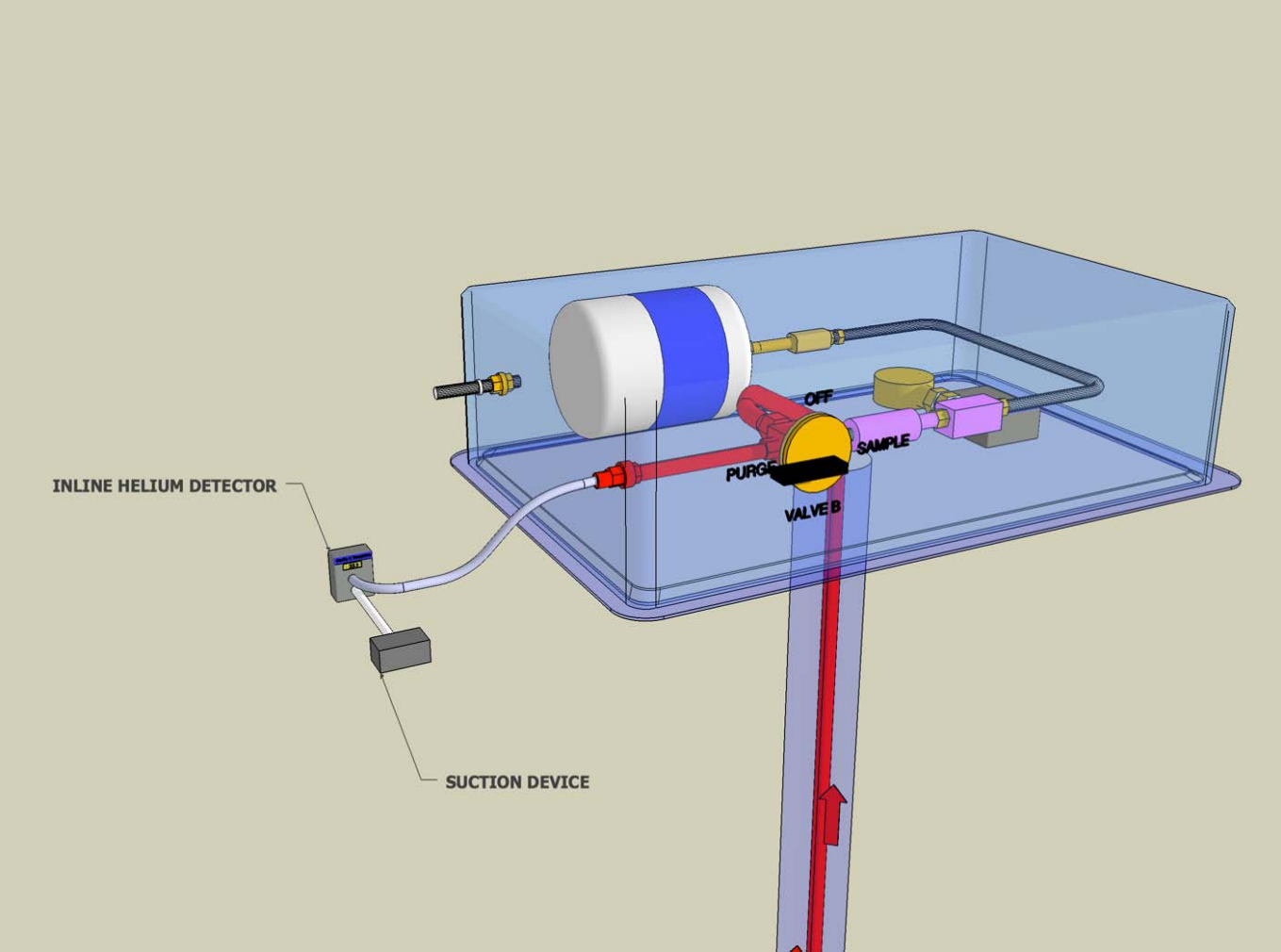

Curtis & Tompkins Laboratories

FULL SERVICE ENVIRONMENTAL ANALYTICAL TESTING

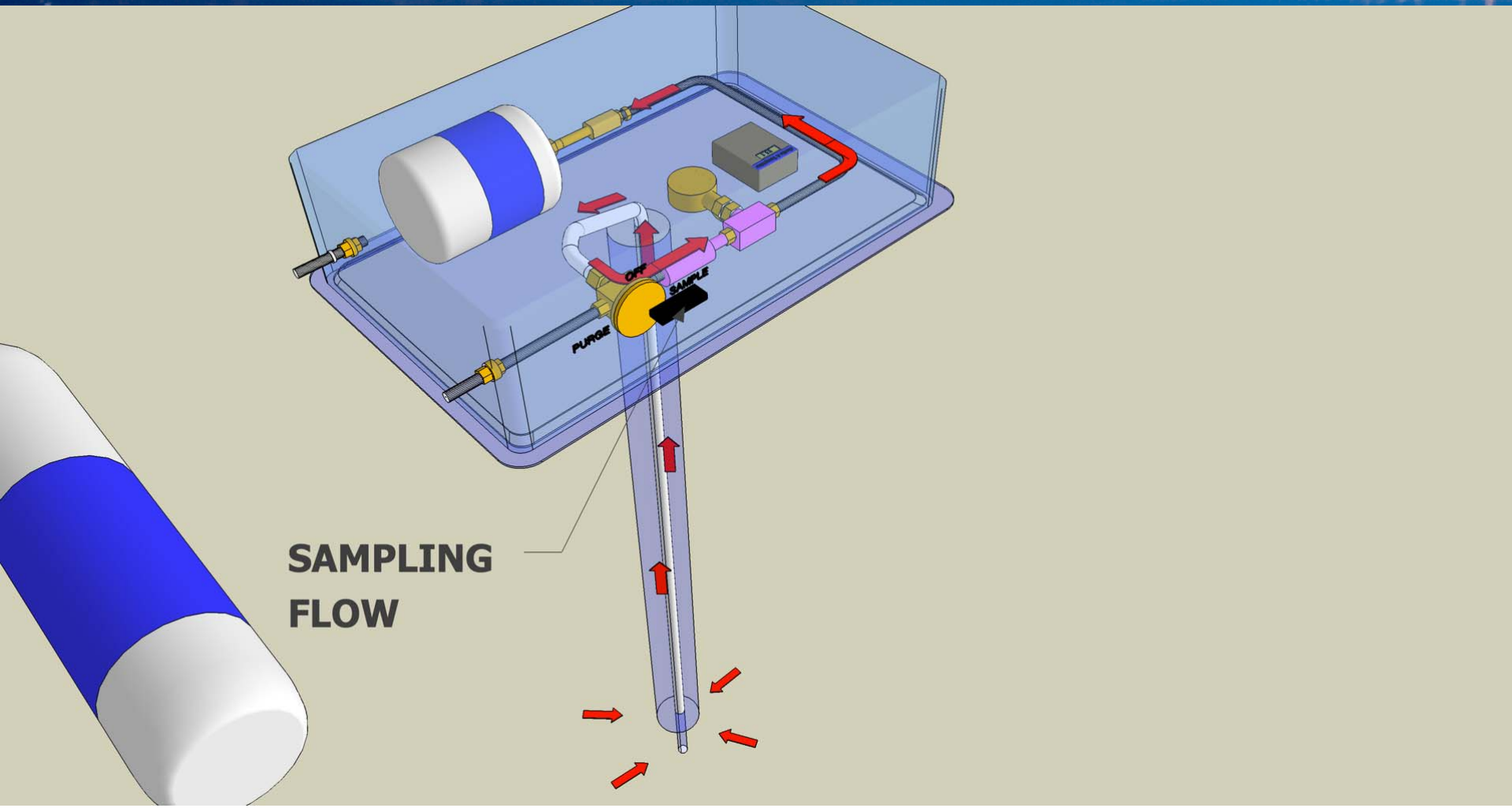

Curtis & Tompkins Laboratories

FULL SERVICE ENVIRONMENTAL ANALYTICAL TESTING

Dual Depth Sampling Shroud

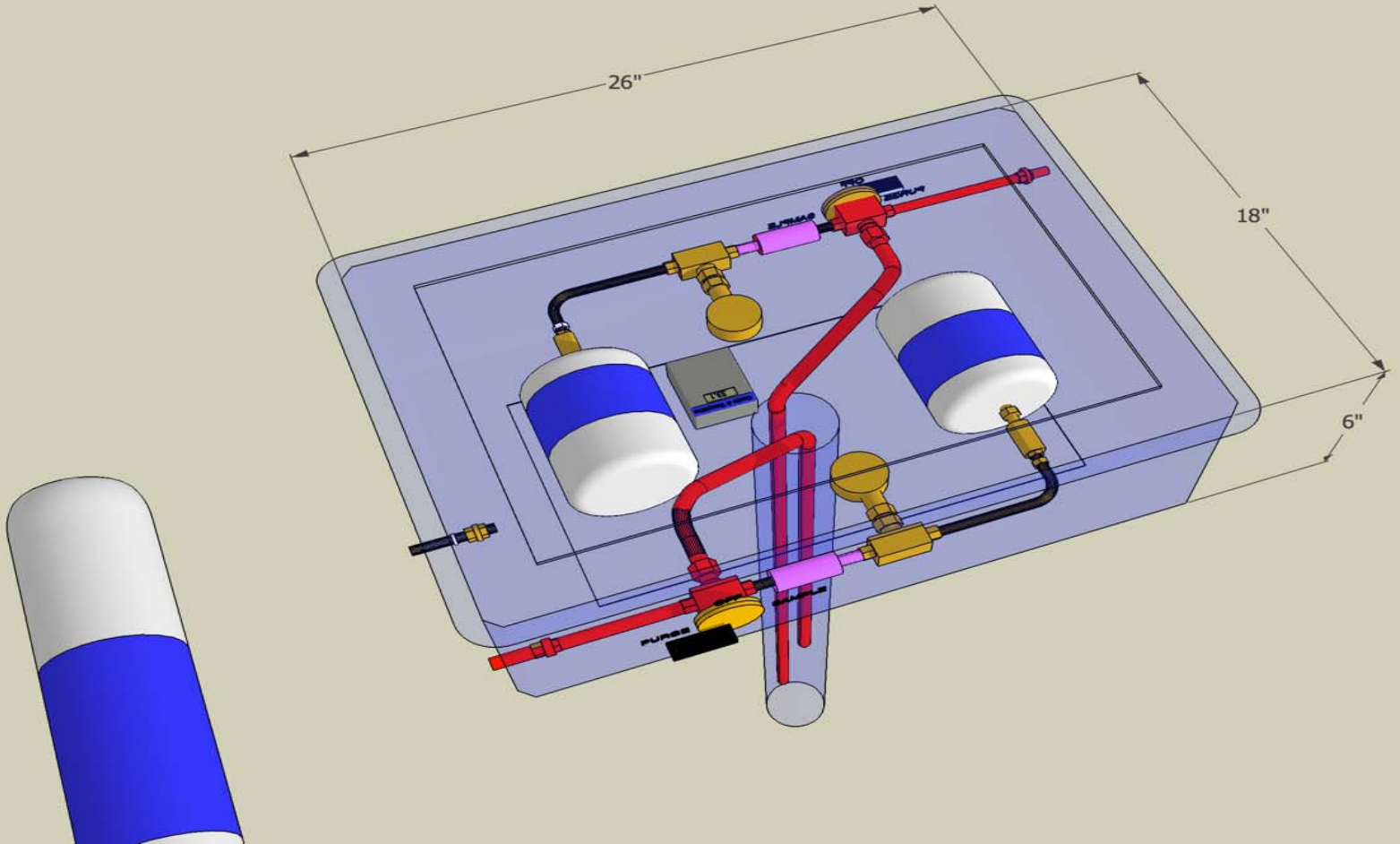

Curtis & Tompkins Laboratories

FULL SERVICE ENVIRONMENTAL ANALYTICAL TESTING

Duplicate Sampling Shroud

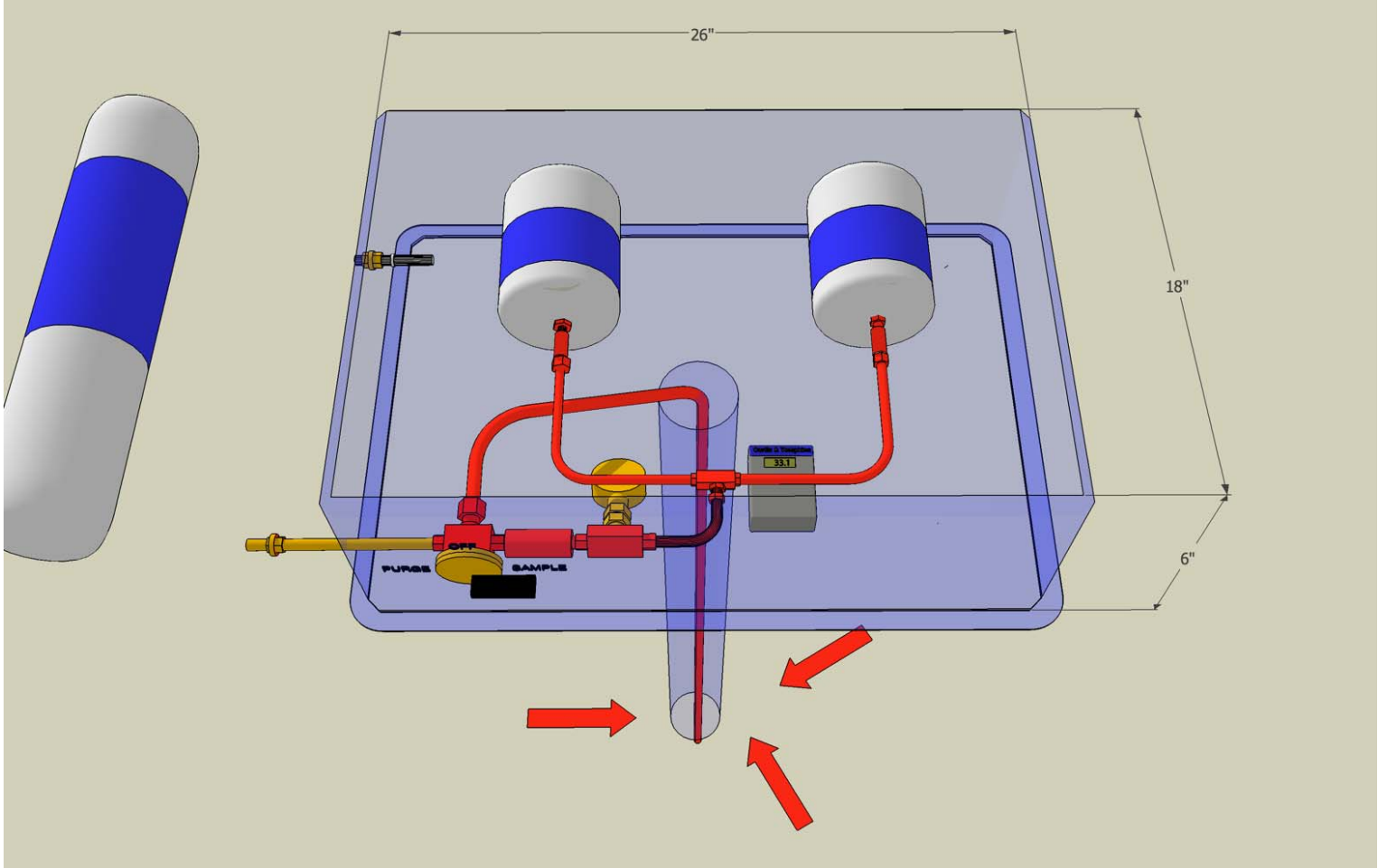

Duplicate Sampling

- Serial Duplicates
- Simultaneous Duplicates

Curtis & Tompkins Laboratories

FULL SERVICE ENVIRONMENTAL ANALYTICAL TESTING

Acknowledgements

- Blair Okuma and crew @ C&T
- Loi Chau/Alfonso Ang: MACTEC
- Ross Tinline: SVC Environmental
- Heather Wollenburg/Robin Mock: ERRG
- Jeff Schmidt: IRIS Environmental
- Mark Blaisdel: ITSI