DELPHI SYSTEMS CORP.

CORRECTIVE MEASURES PROPOSAL

APPENDIX H

VES PILOT STUDY WORK PLAN

Haley & Aldrich, Inc.
500 South Kraemer Blvd.
Suite 370
Brea, CA 92821-6723

Tel: 714.985.3434
Fax: 714.985.3433
HaleyAldrich.com

HALEY & ALDRICH

10 August 2007
File No. 32486-011

Department of Toxic Substances Control
Tiered Permitting and Corrective Action Branch
5796 Corporate Avenue
Cypress, California 90630

Attention: Mr. John Geroch

Subject: SVE Pilot Study Work Plan
Delphi Corporation-Former Anaheim Battery Operations Facility
1201 North Magnolia Avenue
Anaheim, California

Dear Mr. Geroch:

On behalf of Delphi Corporation (Delphi), Haley & Aldrich, Inc. (Haley & Aldrich) is pleased to submit this Soil Vapor Extraction (SVE) Pilot Study Work Plan for the former Hazardous Materials Staging Storage Racks and Trench Area (AOI-25) and the former Maintenance Area in the northeast corner of Warehouse No. 3 (AOI-26) located at the former Delphi Corporation Automotive Battery Facility located at 1201 North Magnolia Avenue, Anaheim, California. The SVE Work Plan has been prepared at the request of the California Department of Toxic Substances Control (DTSC) in accordance with the approved Corrective Action Consent Agreement (CACA) to protect human health and the environment and allow for Site redevelopment.

This Work Plan outlines a pilot test designed to evaluate the applicability of SVE to remediate impacted vadose zone soils at the site. The pilot test will be expanded as necessary, after the initial data performance evaluation period.

Please contact the undersigned with any questions or comments you may have.

Sincerely yours,
HALEY & ALDRICH, INC.

Original signed by Thomas Tatnall

Thomas S. Tatnall, CEG No. 1968, REA
Project Manager/Vice President

Original signed by Patrick Keddington

Patrick Keddington
Senior Engineer

REGISTERED PROFESSIONAL ENGINEER
PATRICK KEDDINGTON
NO. C 64476
EXP.
CIVIL
STATE OF CALIFORNIA

Original signed by Keith Aragona

Keith M. Aragona, P.E.
Senior Engineer

TABLE OF CONTENTS

LIST OF DRAWINGS

1. INTRODUCTION

On behalf of Delphi Corporation (Delphi), Haley & Aldrich, Inc. (Haley & Aldrich) is submitting this Work Plan for a Soil Vapor Extraction (SVE) Pilot Test at the former Delphi Facility located at 1201 N. Magnolia Avenue in Anaheim, California (Site). The location of the Site is shown on Figure 1.

This SVE pilot test work plan has been prepared to evaluate the feasibility of performing vapor extraction to address soils impacted with volatile organic compounds (VOCs) beneath the Site's former Hazardous Materials Staging Storage Racks and Trench Area (AOI-25), and former Maintenance Area in the northeast corner of Warehouse No. 3 (AOI-26). The results of the Facility Investigation (FI) indicate that subsurface soils and soil gas in this area contain chlorinated solvents, primarily 1,1,1-trichloroethane (1,1,1-TCA), 1,1-dichloroethane (1,1-DCA), 1,1-dichloroethene (1,1-DCE), tetrachloroethene (PCE), and 1-2-dichloropropane (1,2-DCP).

SVE is being evaluated as a potentially applicable remedial technology for reducing the mass of VOCs present in the unsaturated zone beneath the Warehouse No. 3 area. The purpose of the SVE pilot test is to collect VOC mass removal and vacuum/flow influence area data to evaluate design parameters, and to allow for appropriate system expansion. If practical the VES will be expanded as necessary to address remediation of all soils requiring remediation to approved cleanup criteria in the area using a full-scale VES system. The following sections describe the scope, SVE pilot system design details, SVE well construction details, and the pilot test procedures. The Site background is described in the FI report (Haley & Aldrich, Inc., 2007).

2. GOALS AND SCOPE

The goal of the SVE pilot test is to estimate the optimum vacuum, well locations and screen placement within wells to produce the maximum influence on impacted silty sand and sand units beneath AOI-25 and AOI-26. Subsurface soils beneath AOI-25 and AOI-26 contain concentrations of VOCs in soil and/or soil gas that exceed commercial and industrial human health risk criteria and groundwater protection criteria.

It is anticipated that the first phase of the SVE pilot test will operate for approximately five days. During this time, SVE operational parameters will be collected and evaluated. These will include soil vapor concentrations, mass removal rates, flow and vacuum radius of influence (ROI), and treatment system efficiency. The data will be reviewed to evaluate whether continued SVE operation will be advantageous to the Site. Upon completion of the first phase of the SVE pilot test, vacuum data will be reviewed and the pilot test may be modified and/or expanded as necessary in order to adequately characterize the area requiring remediation.

3. SVE SYSTEM DESIGN

SVE system components will be installed as described in the work plan drawings included herein. All vapor extraction wells and observation wells have been named such that wells that contain an "S" in their names represent wells that will be completed in the shallow zone and wells with a "D" in their names represent wells that will be completed in the deep zone. A generator may be used for the short-term first phase of the pilot test. A temporary electrical power service will be installed for subsequent phases of the pilot test.

Subsurface soils generally consist of a layer of silty sands that extends from ground surface to approximately eight feet below ground surface (bgs), a silt layer between 8 and 12 feet bgs and then interbedded fine sand and silt layers to approximately 25 feet bgs. SVE system design parameters will be collected and evaluated separately for two soil zones within the vadose zone. These zones include a shallow zone of silty sands from 0 feet to 8 feet bgs and deep zone of fine sands from approximately 12 feet to 25 feet bgs. Horizontal wells (VEW-H1 through VEW-H5) will be used to extract soil vapor from the shallow portion of the vadose zone. Three ROIs will be evaluated in the shallow zone using three observation points (VEW-2S, VEW-3S and VEW-5S) located approximately 10 feet, 18 feet, and 24 feet from the center line of horizontal extraction wells in the shallow zone. Wells VEW-2 and VEW-5 will be completed as dual zone wells containing screens completed in both the shallow (VEW-2S and VEW-5S) and deep zones (VEW-2D and VEW-5D) which will be used to evaluate the ROIs achieved during testing of the vadose zone. Shallow zone pilot test observation wells VEW-2S, VEW-3S, and VEW-5S will be installed such that they can be converted to vapor extraction wells in the future if necessary. The orientation of the wells that will be used to evaluate the shallow zone is shown in Drawing C-2.

One vertical extraction well (VEW-4D) will be used to extract vapor from the deep portion of the vadose zone. Three ROIs will be evaluated in the deep zone (25 feet, 40 feet, and 50 feet) using three observation points screened in the deep zone (VEW-2D, VEW-5D, and VEW-6D). Pilot test observation wells VEW-2D, VEW-5D, and VEW-6D will be installed such that they can be converted to vapor extraction wells in the future if necessary. The orientation of the wells that will be used to evaluate the deep zone is shown in Drawing C-3.

The pilot test system will consist of the following elements:

- Five horizontal SVE extraction wells;
- One vertical SVE extraction well;
- Six SVE observation wells;
- One transportable 500-standard cubic foot per minute (scfm) vacuum blower skid equipped with a vapor liquid separator (knockout tank), capable of achieving vacuums up to 10 inches of mercury;
- Two vapor phase granular activated carbon (GAC) adsorption vessels connected in series;
- 55-gallon drums to transfer entrained water for disposal; and

- Instrumentation and controls.

The actual specifications for blower size, carbon units, and storage containers will be chosen based on selection and availability of equipment from qualified equipment vendors.

The soil vapor from the SVE extraction wells will be conveyed into the knockout tank via temporary above-grade, schedule 80 polyvinyl chloride (PVC) piping. The entrained water will be removed from the soil vapor in the knockout tank before the vapor passes through the vacuum blower. The soil vapor will pass through the GAC vessels where the VOCs will be removed and the treated soil vapor will be discharged to the atmosphere under a South Coast Air Quality Management District (SCAQMD) permit. An equipment schematic is included as Figure 5.

The vapor phase carbon treatment will consist of two vessels containing a minimum of 2,000 pounds of GAC. The vessels will be rated to the maximum discharge pressure of the blower.

Additional SVE extraction points will be installed as necessary to accommodate additional data requirements. SVE pilot test expansion will be completed with input from the California Department of Toxic Substance Control (DTSC).

4. SVE PILOT TEST WELL INSTALLATION

The SVE pilot test will consist of five horizontal extraction wells, one vertical extraction well, and six observation wells. Each vertical well associated with the SVE system will be installed using hollow stem auger drilling techniques and constructed using 0.02 inch slot, 2-inch diameter Schedule 40 PVC screens and 2-inch diameter Schedule 40 risers. All above ground piping will be constructed using Schedule 80 PVC pipe.

Prior to installation of the SVE system, approximately 11,000 square feet of concrete located within AOI-25 and AOI-26 will be demolished and stockpiled on-site. The area that will be demolished coincides with the area in which SVE equipment will be installed. The limits of concrete demolition are shown in Drawing C-1. The locations of wells associated with the SVE system are shown in Drawings C-2 and C-3.

During drill each well will be logged by a geologist and soil types logged in general accordance with the Unified Soil Classification System (USCS) on boring log. Prior to construction of the wells the boring logs will be reviewed to verify proper placement of wells screens.

The annulus of the boreholes of vertical extraction and monitoring wells will be filled with #3 sand, or equivalent, to an elevation approximately six inches above the top of the screen. Bentonite grout or hydrated bentonite pellets will be placed within the borehole to six inches bgs. A protective sleeve constructed of Schedule 40 PVC that is 10 inches in diameter and 36 inch in length will be placed around the casing as shown in Drawing C-4.

The construction of the sand packs around the screens and the protective sleeve of vertical wells containing dual screens and risers (extraction and observation) will be completed as described above. Additionally, a bentonite grout or hydrated bentonite pellet plug will be installed in the annulus between the borehole and the riser pipes such that the shallow and deep screens are separated by a minimum of five feet as shown in Drawing C-4.

The horizontal extraction wells will be installed by completing a trench oriented as described in the drawings to approximately eight feet bgs (or at the depth that coincides with the top of the first silt layer). At least six inches of #3 sand, or equivalent, will be placed in the bottom of the trench. A 0.02 inch slot, 2-inch diameter, Schedule 40 PVC screen will be placed on top of the sand and additional #3 sand, or equivalent, will be placed around and six inches above the top of the screen as shown in Drawing C-5. Additional piping associated with operation of the SVE system will be completed as described in the Drawings and the trench will be backfilled, using excavation soils.

5. SVE PILOT TEST PROCEDURES

The SVE pilot test procedures include baseline monitoring and sampling that will occur during the SVE test. The SVE pilot test procedures have been developed to assess shallow and deep SVE extraction well ROIs, baseline soil vapor extraction rates, and extracted VOC concentrations during the SVE pilot test. Pilot test procedures also outline the type and frequency of monitoring and sampling that will be performed during the SVE test.

In addition to the observation wells (VEW-2S/D, VEW-3S, VEW-5S, VEW-6D, and VEW-7D) installed to evaluate vacuum induced by vapor extraction wells, a vacuum measurement port will be installed on nearby groundwater monitoring well HA-MW-7, if possible. Vacuum measurements will be made using either a calibrated vacuum gauge or manometer. Field measurements and sample collection will be performed in accordance with standard operating procedures to maximize data quality.

During the first phase of the pilot test, VOCs will be extracted from the upper eight feet of soil from wells VEW-H2 and VEW-H4, targeting subsurface impacts between approximately 0 feet and 8 feet bgs. Upon completion of shallow zone SVE testing, VOCs will be extracted from VEW-4D targeting subsurface impacts between approximately 12 feet and 25 feet bgs. Vacuum induced by the SVE system will be monitored at three locations (VEW-2S, VEW-3S, and VEW-5S) during evaluation of the shallow portion of the vadose zone and three locations (VEW-2D, VEW-5D, and VEW-6D) during evaluation of the deep portion of the vadose zone.

The SVE pilot test will be conducted in steps by extracting soil vapor from the horizontal wells (VEW-H2 and VEW-H4) and then the vertical SVE extraction well (VEW-4D) at three different wellhead vacuums and flow rates. The proposed SVE test vacuums are 2-, 4-, and 8-inches of mercury gauge and the vacuums will be adjusted by decreasing the dilution air to the vacuum blower. The vapor flow rates from the SVE extraction well will be measured for each vacuum. The SVE pilot test first phase will be operated for a minimum of 4 hours at each vacuum in both the shallow and deep portions of the vadose zone, unless the soil vapor concentrations could potentially result in saturation of the GAC and break through. The duration or the number of vacuums may be decreased to accommodate the situation.

Measurements that will be collected and recorded on field data sheets at each vacuum will include the following:

- Vapor flow rate and vacuum will be recorded from the extraction wells every 15 minutes.
- Vacuum measurements from SVE observation wells (VEW-2S/D, VEW-3S, VEW-5S, VEW-5D, and VEW-6D) and the groundwater monitor well (HA-MW-7) equipped with a vacuum port will be recorded every 15 minutes for the first hour and then every hour thereafter during the pilot test.
- Water production in the vapor-liquid separator will be measured and recorded every hour during the pilot test.

Samples collected during each vacuum will include the following:

- Soil vapor samples for laboratory analysis will be collected after one and four hours of operation for each vacuum in Tedlar bags or Summa™ canisters. Soil vapor samples will be analyzed for VOCs using EPA Method TO-14, and for methane, carbon dioxide, and oxygen using American Society for Testing and Materials (ASTM) Method 1946.

- Soil vapor samples for field analysis will be collected after 30 minutes, one hour, two hours, three hours, and four hours of operation for each vacuum using Tedlar bags and measured with a calibrated Photoionization Detector (PID). Soil vapor samples will be collected at the influent and effluent of the vapor phase carbon. The effluent will be collected at a frequency specified in the SCAQMD air permit for the vacuum blower skid.

Based on the variably of the data collected by the above step-test procedures, the need for a constant-rate test will be evaluated. During a constant rate test, the pilot test system will be run at a single vacuum for up to eight hours.

In order to facilitate the evaluation of required SVE well field layout, vacuum data will be evaluated in real time. Air samples collected during the pilot test will be expedited at the laboratory so that carbon usage can be evaluated. Rapid evaluation of pilot test data will result in an estimate of design parameters required to maximize the effectiveness of the expansion of the pilot scale SVE system. Data will be evaluated to estimate the following:

- The ROIs, and corresponding vacuums, of air flow resulting from SVE wells.

- Mass removal rate of VOCs from the gas phase.

- Optimal well spacing, vacuums, and vapor treatment for a full-scale SVE system, if necessary.

- Effectiveness of the horizontal well in the shallow soils.

5.1 Health & Safety

The existing Site-specific health and safety plan (HASP) will be amended prior to concrete demolition and system installation and operation, and will include construction oversight, and operation and maintenance of the treatment system.

5.2 Underground Utilities

Underground utilities have reportedly been removed in the vicinity of Warehouse No.3, with the exception of a storm drain located north of the warehouse thought to be aligned in a north-south direction. However, Underground Service Alert will be notified at leas 48-hours prior to performing any subsurface excavation work.

5.3 Verification Sampling

Prior to completion of the pilot scale SVE test, soil and soil gas samples will be collected to evaluate the effectiveness of the SVE system to remediate soils at the Site.

6. REPORTING

Upon approval of this work plan by the DTSC, the SVE pilot test will be implemented. Upon completion of each phase of the pilot test, the DTSC will be advised of the results. Drawings will be amended and resubmitted to the DTSC for review prior to system expansion. Upon completion of all of the pilot test phases, a report will be prepared describing system operation, monitoring activities, and system performance. A well construction log and a discussion of system construction specifics will be included in the report. VOC monitoring data will be included in tables, figures, and graphs to illustrate destruction efficiency and the volume of VOCs removed to date. Other measurements taken in the field will also be presented in tabular format.

DRAWINGS

SAW CUT, DEMOLISH, REMOVE, AND STOCKPILE CONCRETE

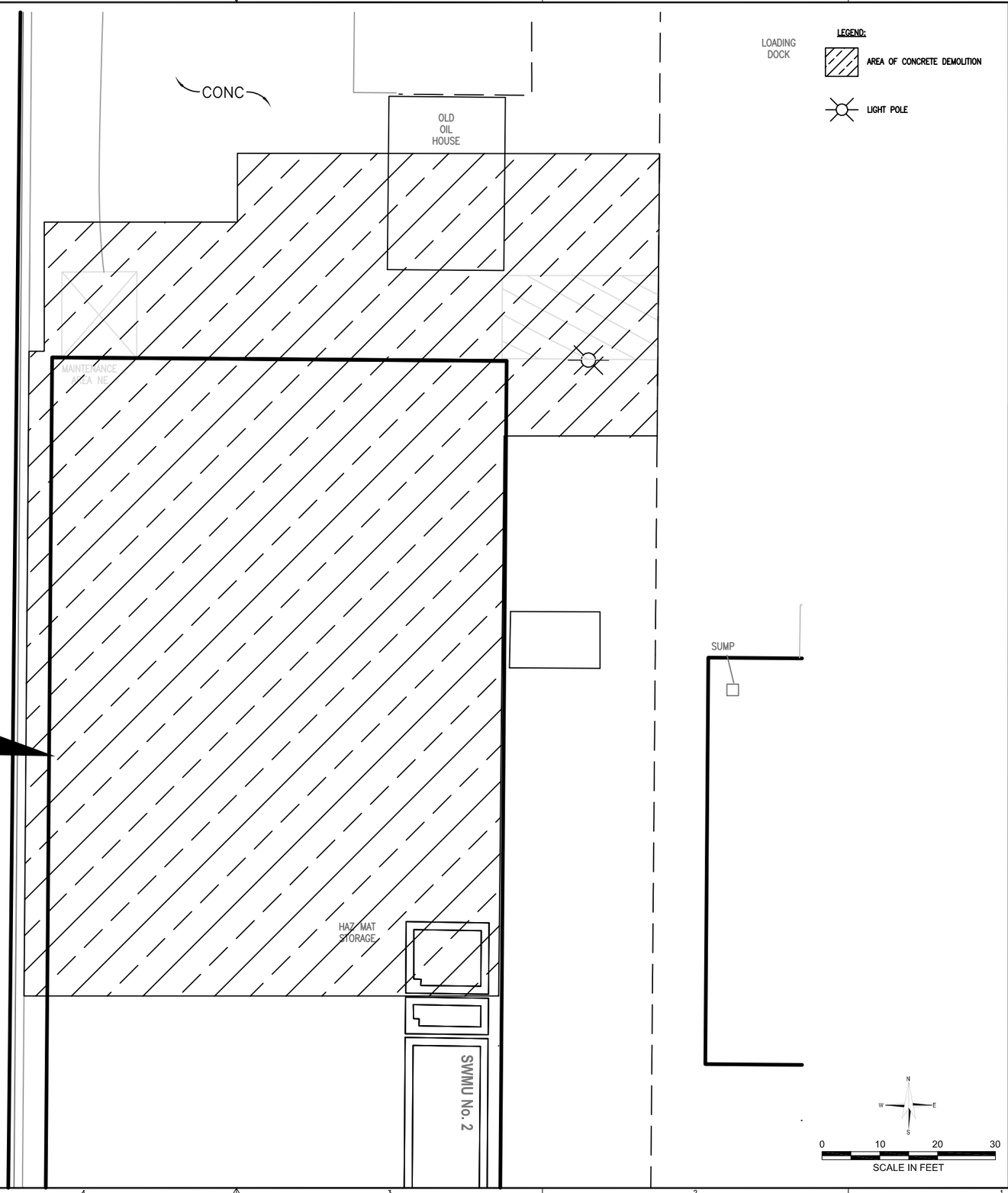

HALEY & ALDRICH
Haley & Aldrich of Michigan, Inc.
44808 Helm Street
Plymouth, MI 48170-6026
Tel: 734.454.1100
Fax: 734.454.1233
HaleyAldrich.com

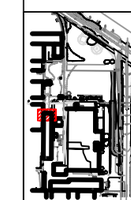

KEY PLAN
NOT TO SCALE

Project No.:	32486-011
Scale:	NONE
Date:	JUNE 2007
Autocad File:	32486-011-0001-C1_C3_R3
Drawn By:	KMA
Designed By:	KMA
Checked By:	PAK
Approved By:	PAK
Stamp:	

Rev.	Description	By	Date
1	PILOT TEST RAW	PAK	8/10/07
0	PILOT TEST DESIGN	KMA	6/29/07

SOIL VAPOR
EXTRACTION PILOT TEST

DELPHI CORPORATION
ANAHEIM, CALIFORNIA

PILOT SCALE
SOIL VAPOR
EXTRACTION SITE
PLAN

Sheet: 1 OF 6 | Issue: A

C-1

C:\DOCUMENTS AND SETTINGS\CTSIATSIOS\DESKTOP\DELPHI\32486-011-0001-C1_C3_R3.DWG

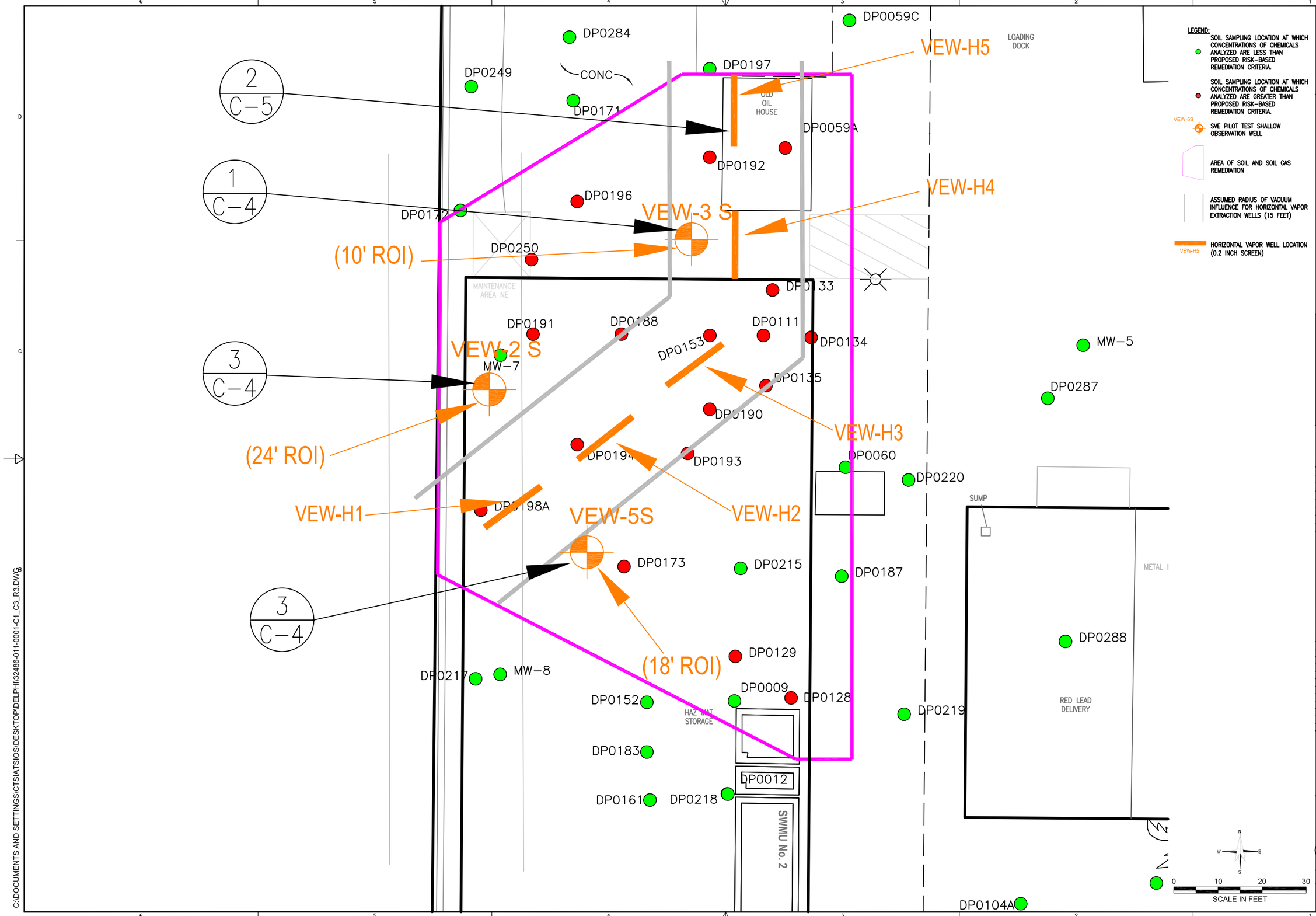

LEGEND:

- SOIL SAMPLING LOCATION AT WHICH CONCENTRATIONS OF CHEMICALS ANALYZED ARE LESS THAN PROPOSED RISK-BASED REMEDIATION CRITERIA.
- SOIL SAMPLING LOCATION AT WHICH CONCENTRATIONS OF CHEMICALS ANALYZED ARE GREATER THAN PROPOSED RISK-BASED REMEDIATION CRITERIA.
- VEW-SS SVE PILOT TEST SHALLOW OBSERVATION WELL
- AREA OF SOIL AND SOIL GAS REMEDIATION
- ASSUMED RADIUS OF VACUUM INFLUENCE FOR HORIZONTAL VAPOR EXTRACTION WELLS (15 FEET)
- VEW-H5 HORIZONTAL VAPOR WELL LOCATION (0.2 INCH SCREEN)

HALEY & ALDRICH
Haley & Aldrich of Michigan, Inc.
44808 Helm Street
Plymouth, MI 48170-6026
Tel: 734.454.1100
Fax: 734.454.1233
HaleyAldrich.com

KEY PLAN
NOT TO SCALE

Project No.:	32486-011
Scale:	NONE
Date:	JUNE 2007
Autocad File:	32486-011-0001-C1_C3_R3
Drawn By:	KMA
Designed By:	KMA
Checked By:	PAK
Approved By:	PAK
Stamp:	

Rev.	Description	By	Date
1	PILOT TEST RAW	PAK	8/10/07
0	PILOT TEST DESIGN	KMA	6/29/07

SOIL VAPOR EXTRACTION PILOT TEST

DELPHI CORPORATION
ANAHEIM, CALIFORNIA

PILOT SCALE SOIL VAPOR EXTRACTION SITE PLAN (SHALLOW IMPACTS)

Sheet: 2 OF 6 | Issue: A

C-2

C:\DOCUMENTS AND SETTINGS\CTSIATSIOS\DESKTOP\DELPHI\32486-011-0001-C1_C3_R3.DWG

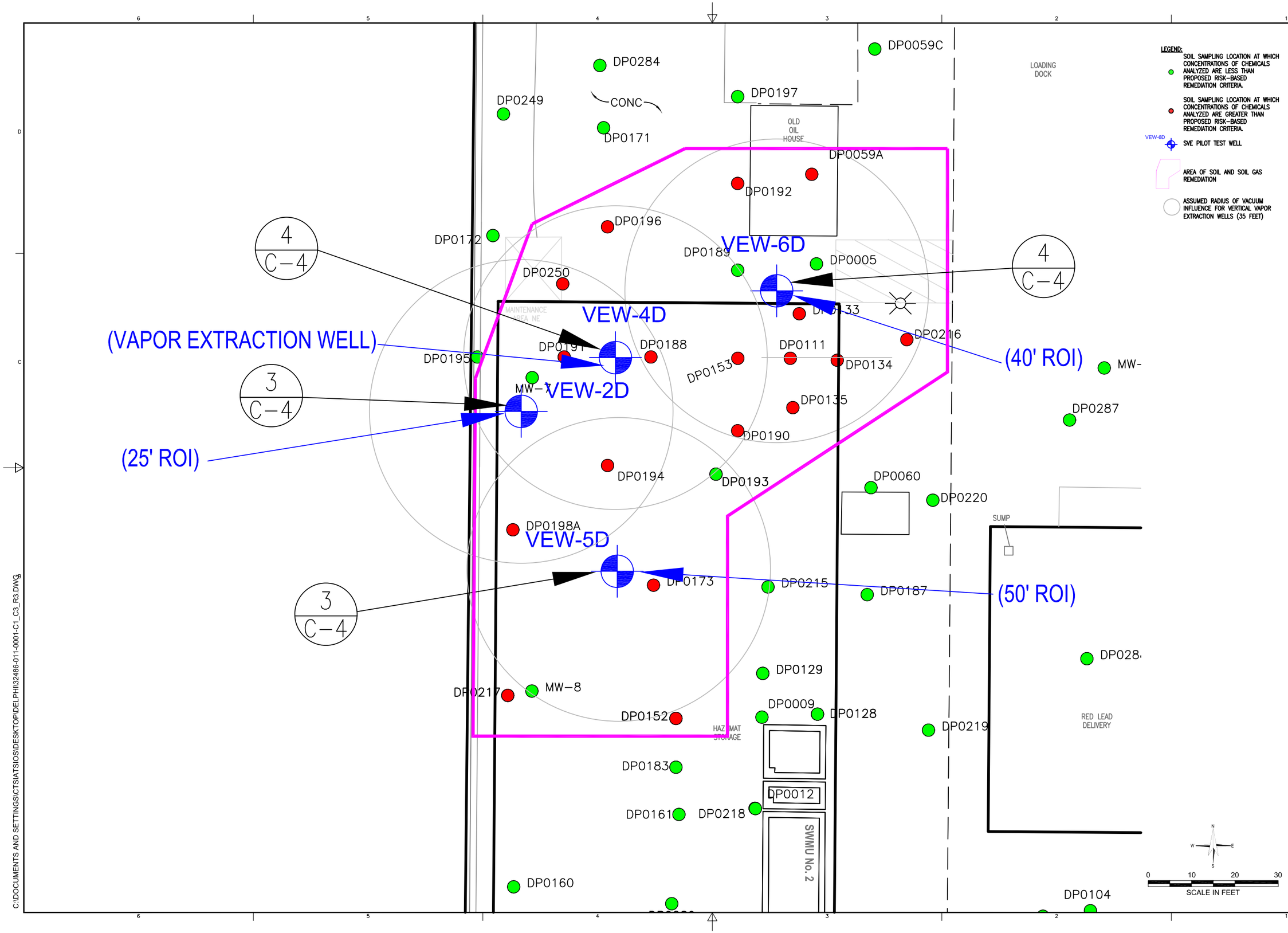

LEGEND:

- SOIL SAMPLING LOCATION AT WHICH CONCENTRATIONS OF CHEMICALS ANALYZED ARE LESS THAN PROPOSED RISK-BASED REMEDIATION CRITERIA.
- SOIL SAMPLING LOCATION AT WHICH CONCENTRATIONS OF CHEMICALS ANALYZED ARE GREATER THAN PROPOSED RISK-BASED REMEDIATION CRITERIA.
- VEW-6D SVE PILOT TEST WELL
- AREA OF SOIL AND SOIL GAS REMEDIATION
- ASSUMED RADIUS OF VACUUM INFLUENCE FOR VERTICAL VAPOR EXTRACTION WELLS (35 FEET)

HALEY & ALDRICH

Haley & Aldrich of Michigan, Inc.

44808 Helm Street
Plymouth, MI 48170-6026
Tel: 734.454.1100
Fax: 734.454.1233
HaleyAldrich.com

KEY PLAN
NOT TO SCALE

Project No.:	32486-011
Scale:	NONE
Date:	JUNE 2007
Autocad File:	32486-011-0001-C1_C3_R3
Drawn By:	KMA
Designed By:	KMA
Checked By:	PAK
Approved By:	PAK
Stamp:	

Rev.	Description	By	Date
1	PILOT TEST RAW	PAK	8/10/07
0	PILOT TEST DESIGN	KMA	6/23/07

SOIL VAPOR EXTRACTION PILOT TEST

DELPHI CORPORATION
ANAHEIM, CALIFORNIA

PILOT SCALE SOIL VAPOR EXTRACTION SITE PLAN (DEEP IMPACTS)

Sheet: 3 OF 6 | Issue: A

C-3

C:\DOCUMENTS AND SETTINGS\CTSIATSIOS\DESKTOP\DELPHI\32486-011-0001-C1_C3_R3.DWG

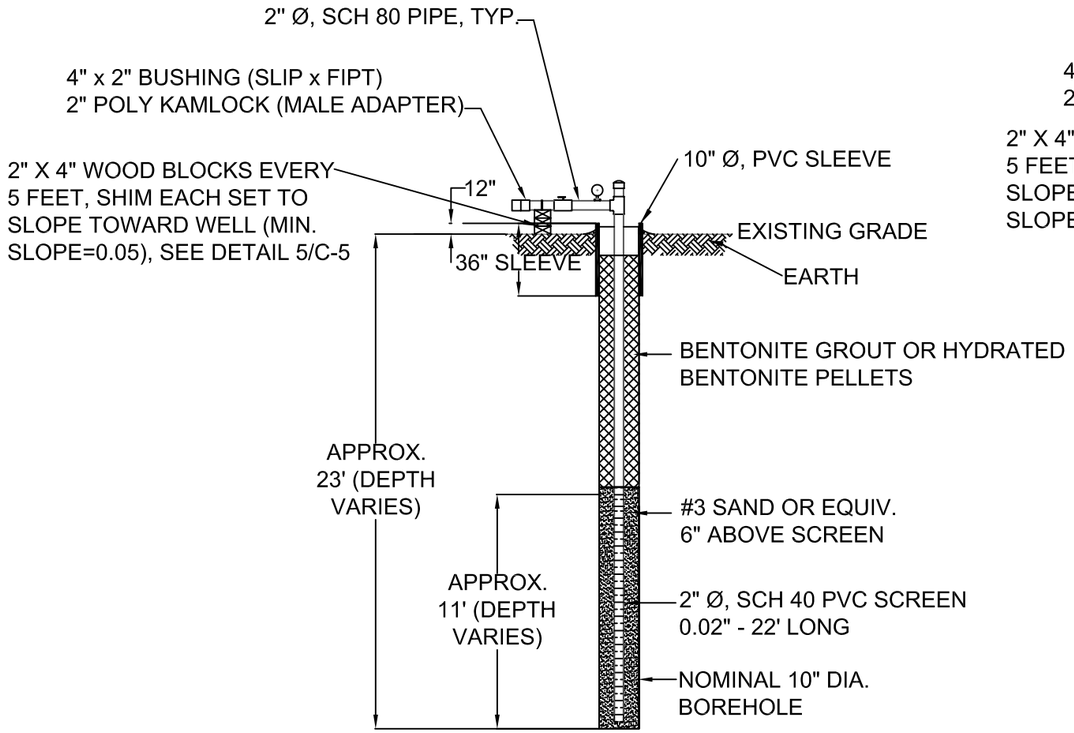

4 C-4 VEW-4D, VEW-6D VERTICAL WELL DETAIL

SCALE: NONE

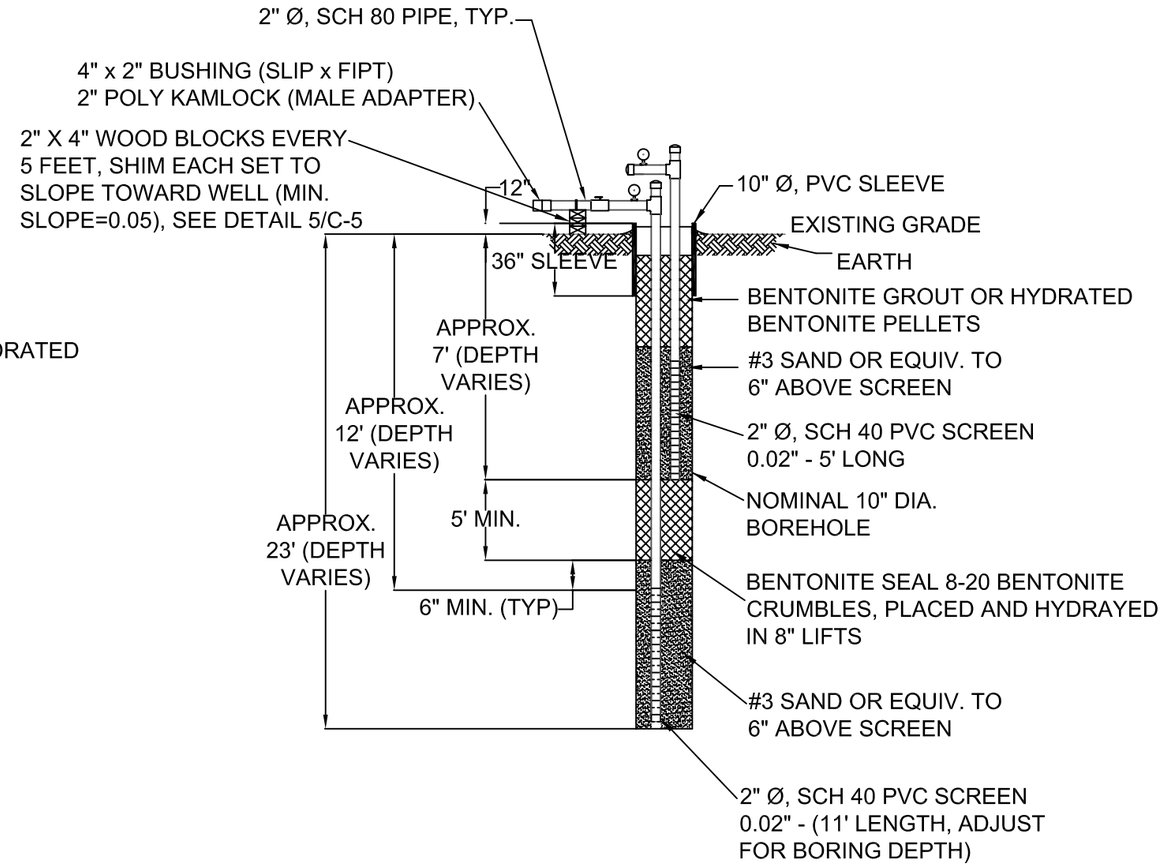

3 C-4 VEW-2 S/D, VEW-5 S/D VERTICAL WELL DETAIL

SCALE: NONE

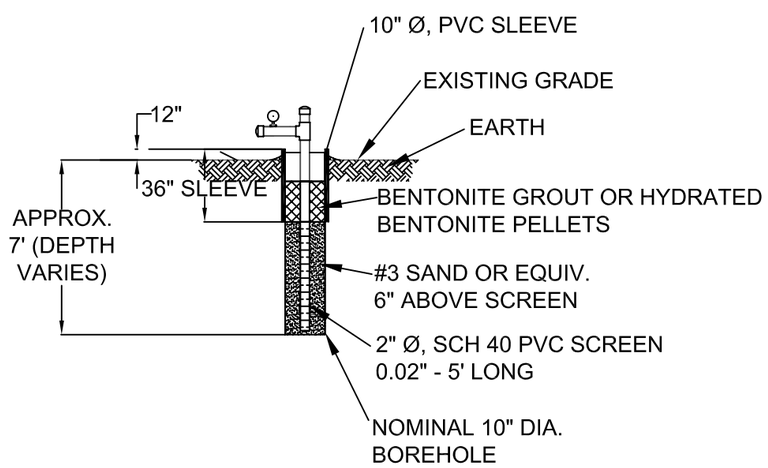

1 C-4 VEW-3 S VERTICAL WELL DETAIL

SCALE: NONE

NOTES:

1. DEPTHS OF WELL SCREENS AND LENGTHS OF WELL SCREENS ARE APPROXIMATE. ACTUAL WELL SCREEN DIMENSIONS WILL BE DETERMINED BASED ON FIELD OBSERVATIONS.

HALEY & ALDRICH

Haley & Aldrich of Michigan, Inc.

44808 Helm Street
Plymouth, MI 48170-6026
Tel: 734.454.1100
Fax: 734.454.1233
HaleyAldrich.com

KEY PLAN
NOT TO SCALE

Project No.:	32486-011
Scale:	NONE
Date:	JUNE 2007
Autocad File:	32486-011-0004-DETAILS
Drawn By:	KMA
Designed By:	KMA
Checked By:	PAK
Approved By:	PAK
Stamp:	

Rev.	Description	By	Date
1	PILOT TEST RAW	PAK	8/10/07
0	PILOT TEST DESIGN	KMA	6/29/07

SOIL VAPOR EXTRACTION PILOT TEST

DELPHI CORPORATION
ANAHEIM, CALIFORNIA

DETAILS

Sheet: 4 OF 6 | Issue: A

C-4

C:\DOCUMENTS AND SETTINGS\CTSIATSIOS\DESKTOP\DELPHI\32486-001-0004-DETAILS.DWG

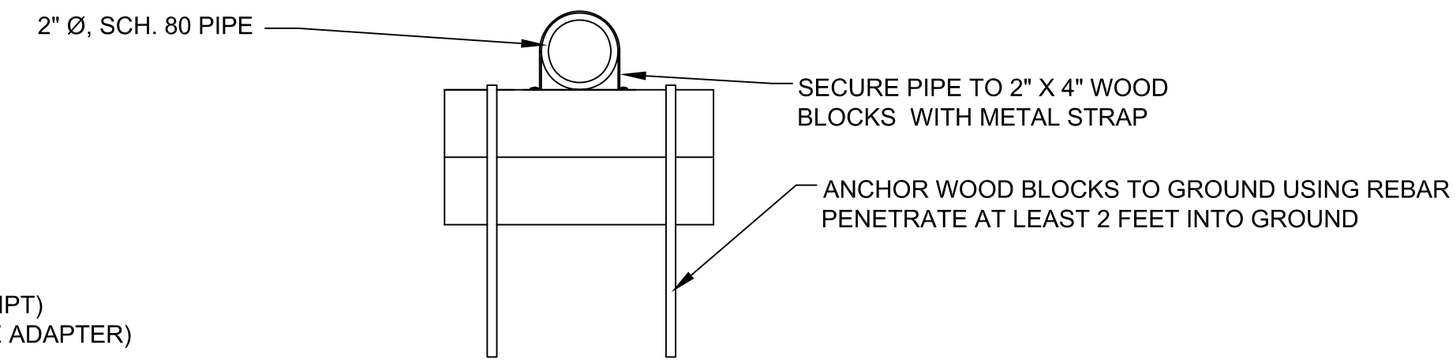

5 / C-5 PIPE SECURE DETAIL

SCALE: NONE

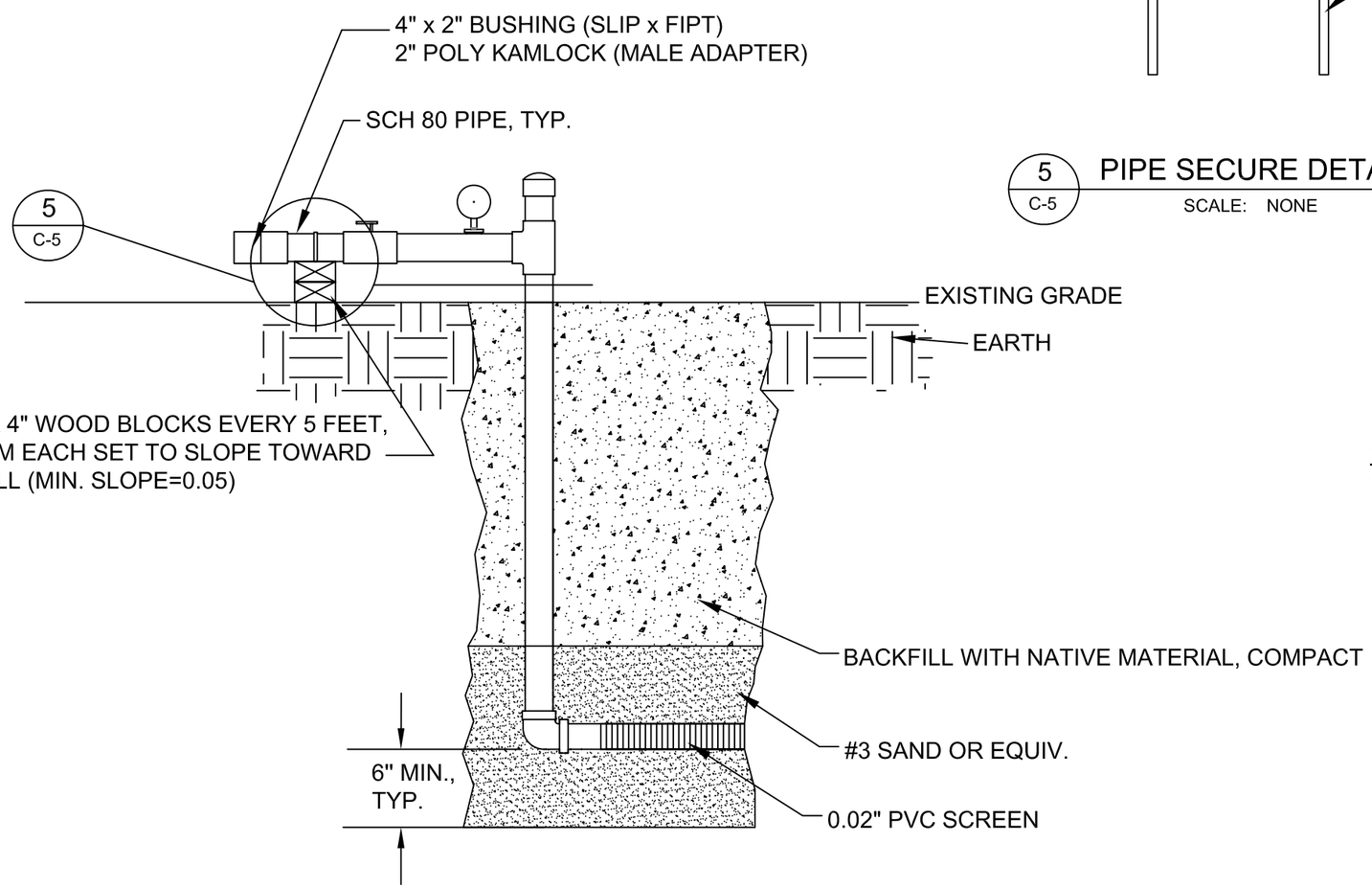

2 / C-5 HORIZONTAL TRENCH WELL DETAIL, TYP.

SCALE: NONE

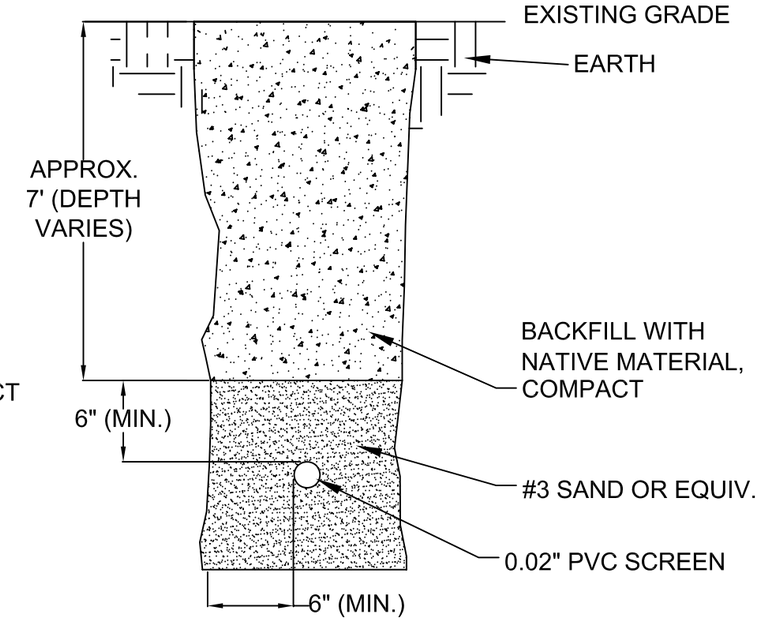

2 / C-5 HORIZONTAL TRENCH WELL DETAIL, TYP.

SCALE: NONE

NOTES:

1. DEPTHS OF WELL SCREENS AND LENGTHS OF WELL SCREENS ARE APPROXIMATE. ACTUAL WELL SCREEN DIMENSIONS WILL BE DETERMINED BASED ON FIELD OBSERVATIONS.

HALEY & ALDRICH

Haley & Aldrich of Michigan, Inc.

44808 Helm Street
Plymouth, MI 48170-6026
Tel: 734.454.1100
Fax: 734.454.1233
HaleyAldrich.com

KEY PLAN
NOT TO SCALE

Project No.:	32486-011
Scale:	NONE
Date:	JUNE 2007
Autocad File:	32486-011-0004-DETAILS
Drawn By:	KMA
Designed By:	KMA
Checked By:	PAK
Approved By:	PAK
Stamp:	

Rev.	Description	By	Date
1	PILOT TEST RAW	PAK	8/10/07
0	PILOT TEST DESIGN	KMA	6/29/07

SOIL VAPOR EXTRACTION PILOT TEST

DELPHI CORPORATION
ANAHEIM, CALIFORNIA

WELL CONSTRUCTION DETAILS

Sheet: 5 OF 6 | Issue: A

C-5

C:\DOCUMENTS AND SETTINGS\CTSIATSIOS\DESKTOP\DELPHI\32486-001-0004-DETAILS.DWG

DRAFT

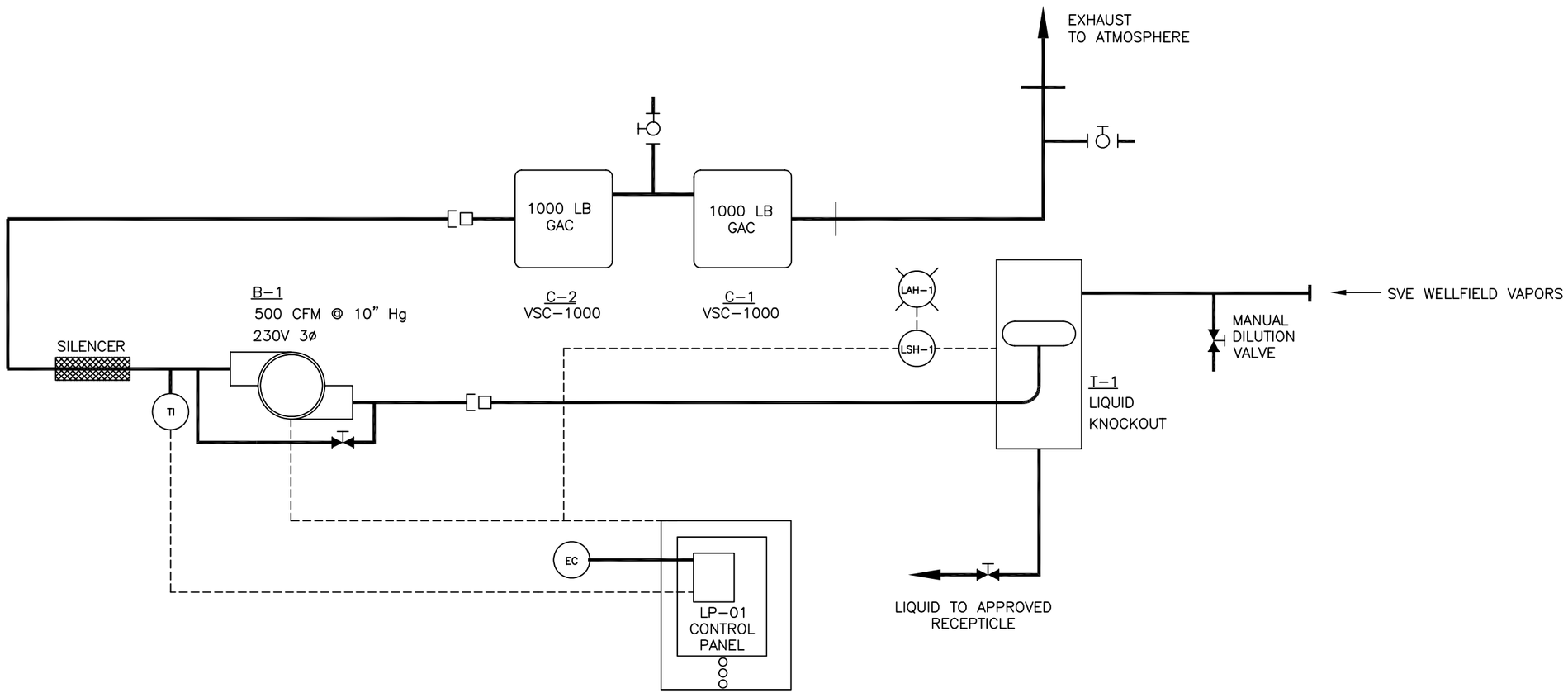

HALEY & ALDRICH
Haley & Aldrich of Michigan, Inc.
44808 Helm Street
Plymouth, MI 48170-6026
Tel: 734.454.1100
Fax: 734.454.1233
HaleyAldrich.com

KEY PLAN
NOT TO SCALE

Project No.:	32486-011
Scale:	NONE
Date:	JUNE 2007
Autocad File:	32486-011-0006-P1
Drawn By:	KMA
Designed By:	KMA
Checked By:	PAK
Approved By:	PAK
Stamp:	

Rev.	Description	By	Date
1	PILOT TEST RAW	PAK	8/10/07
0	PILOT TEST DESIGN	KMA	6/29/07

SOIL VAPOR
EXTRACTION PILOT TEST

DELPHI CORPORATION
ANAHEIM, CALIFORNIA

SVE PILOT
TEST EQUIPMENT
SCHEMATIC

Sheet: 6 OF 6 | Issue: A

P-1

C:\DOCUMENTS AND SETTINGS\CTS\ATS\OS\DESKTOP\DELPHI\32486-011-0006-P1.DWG