Appendix B

Technical Memorandum
Investigation and Evaluation of Organochlorine Pesticides at the Proposed Cherokee Point Elementary School
San Diego, California

DEPARTMENT OF TOXIC SUBSTANCES CONTROL

Winston H. Hickox
Agency Secretary
California Environmental
Protection Agency

Edwin F. Lowry, Director
1011 North Grandview Avenue
Glendale, California 91201

Gray Davis
Governor

Technical Memorandum

Investigation and Evaluation of Organochlorine Pesticides
Proposed Cherokee Point Elementary School
38th and Wightman Streets
San Diego, California

June 25, 2003

Jennifer Jones
Project Manager

Robbie Morris
Project Manager

William Bosan, Ph.D.
Staff Toxicologist

TECHNICAL MEMORANDUM DTSC

Subject: Technical Memorandum for Investigation and Evaluation of Organochlorine Pesticides in Soil at the Proposed Cherokee Point Elementary School, San Diego, California, as part of the DTSC Residential Pesticide Study

1 0 INTRODUCTION

This Technical Memorandum presents the results of an environmental investigation of organochlorine pesticides at a proposed school site in the San Diego Unified School District (SDUSD) The investigation was carried out by the State of California Department of Toxic Substances Control (DTSC), as a part of the U.S. EPA-funded Residential Pesticide Study to determine the prevalence of organochlorine pesticides in soils associated with historical termiticide applications, and whether they pose a threat to human health or the environment at residential properties proposed as school sites. The Residential Pesticide Study samples were collected by DTSC staff, consistent with the DTSC Scope of Work, dated April 16, 2002 This Technical Memorandum presents the findings of the DTSC investigation and conclusions based on a human health risk assessment for the proposed school site.

SDUSD voluntarily agreed to participate in the study to evaluate the residences at the Proposed Cherokee Elementary School located at 38th and Wightman Streets, California. Since the early 1930's, the approximately seven-acre site has consisted of residential homes (approximately 40 homes) and associated garages and sheds Surrounding land use is primarily residential

1 1 Background

Chlordane was widely used throughout the United States as a termiticide until it was banned by the U S EPA in 1988 Based on historical information, chlordane was commercially applied using primarily two methods: 1) application onto surface soils around homes and in crawlspaces; and 2) injection into subsurface soils around home footings and foundations as a concentrated liquid barrier

For proposed school sites; DTSC does not routinely evaluate residential properties for potential impacts from organochlorine pesticides. However, based on the widespread application of chlordane in and around homes; the potential unacceptable risks posed by residual chlordane and other pesticides in soil within residential subdivisions; the environmental persistence of chlorinated pesticides; and the lack of data on pesticide residues at residential and/or commercial properties, further investigation is warranted

In order to evaluate the need for sampling and analysis of organochlorine pesticides at residential areas acquired for new school construction, DTSC is conducting a Residential Pesticide Study and is collecting soil samples at selected residential areas for analysis of organochlorine pesticides at a State of California-certified contract laboratory Under an unrestricted land use scenario, the results will be evaluated for potential human health risks and presented to the school district for further investigation or removal action if necessary The overall findings of the DTSC study will be presented in a final report, along with the recommendation for or against region-wide organochlorine pesticide sampling at residential areas proposed for school development in southern California

2.0 SAMPLING METHODS AND PROCEDURES

Samples were collected under a DTSC-prepared scope of work (DTSC 2002). Sampling depths were modified based on refusal in the field. Samples were only collected at surface and 2 feet below ground surface (bgs). Four homes were evaluated during the first sampling event. A total of 32 soil samples, two field duplicate soil samples, and one equipment blank rinseate sample were collected for analysis of organochlorine pesticides using EPA Method 8081A. Due to elevated levels of pesticides detected during the first event, a second round of samples was collected at five additional homes (a total of 20 samples, two field duplicates and one equipment rinseate). Disposable trowels were used to collect surface samples. Hand auger soil sampling techniques were used to collect grab soil samples from 2-feet bgs. Based on analytical results of the first sampling, only surface samples were collected during the second event. Homes had been previously demolished and samples were collected near the former footings of the structures. Sampling locations are shown in Figures 1 and 2.

2.1.1 Utility Clearance

Since samples were collected only to 2-feet bgs, utility clearance was not required.

2.1.2 Soil Samples

Surface samples were collected using disposable hand trowels. Deeper borings were advanced using hand auger techniques. Once the sample depth was reached, the hand auger was removed from the boring and grab samples were collected using disposable hand trowels and placed in pre-labeled glass jars. Upon completion of sampling, soil cuttings generated during hand augering were placed back into borings.

2.1.3 Sample Containers and Preservatives

Prior to sampling, Associated Laboratories, a State of California-certified contract laboratory in Orange, California, provided sample containers required for the specific analysis. Upon collection, soil samples were placed in an insulated cooler at 4 °C and transported to the lab under chains of custody.

2.1.4 Sample Packaging and Shipment

To identify and manage samples obtained in the field, a sample label was affixed to each sample container. The sample label included the following information:

- Site name
- Boring number
- Sample identification number
- Sampler's initials
- Date and time of collection

2.1.5 Sample Documentation

Field notes were taken to document vital project information (Appendix A). Entries in the field notes include the following:

- Sample identification number
- Sample depth

- Sample time
- Sampler's initials
- General comments/observations

2.1.6 Geologic Soil Classification

All soil samples were classified by a DTSC Registered Geologist in accordance with the United States Classification System. Generally, the samples were classified as relatively fine grained, composed predominantly of silts and clay. The deeper samples contained a higher percentage of sand. The 0.5 foot samples were predominantly sandy silts with an organic component, which could be attributed to vegetation growing at the site. The presence of anthropogenic material, such as small pieces of brick and building debris, indicated the soils had been reworked during demolition and grubbing. The 2-foot samples were predominately silty sands and sandy clays, with coarser grains, yellowish-brown coloring, and less organic material. Many of these samples also contained anthropogenic materials.

2.1.7 Chain-of-Custody (COC) Records

Chain of Custody (COC) records were used to document sample collection and shipment history to the laboratory for analysis, copies of which are maintained on file at DTSC. A COC record accompanied all sample shipments for analyses.

2.1.8 Decontamination Procedures

All non-disposable equipment that came into contact with potentially contaminated soil or water was decontaminated consistently to assure the quality of samples collected. Disposable equipment intended for one time use was not decontaminated but was packaged for appropriate disposal. After each boring location was sampled equipment was decontaminated using a three-stage procedure as follows:

- Non-phosphate detergent and tap water wash, brush when necessary
- Initial deionized/distilled water rinse
- Final deionized/distilled water rinse

Equipment was decontaminated in a pre-designated area on plastic sheeting, and clean bulky equipment was stored on plastic sheeting in uncontaminated areas.

After all samples were collected and equipment was decontaminated, an equipment blank was collected. This procedure consisted of collecting a one-liter sample of the final deionized/distilled water rinseate as it was poured over a decontaminated hand auger. The sample was collected in a pre-labeled glass jar and placed in the cooler along with the soil samples for transport to the laboratory and analysis of organochlorine pesticides by EPA Method 8081A.

2.1.9 Investigative-Derived Waste Management

In the process of collecting environmental samples during the field sampling program different types of potentially contaminated investigation-derived wastes were generated including the following:

- Used personal protective equipment (PPE)
- Disposable sampling equipment
- Soil cuttings

- Decontamination fluids

Sampling depths did not advance past 2 feet bgs. Soil cuttings were placed back in respective borings. Decontamination fluids were properly disposed of offsite Disposable sampling equipment and used PPE were double-bagged and placed in a municipal refuse receptacle These wastes were not considered hazardous and were sent to a municipal landfill. Any PPE and disposable equipment that could potentially be reused were rendered inoperable before disposal in the refuse receptacle.

3.0 ANALYTICAL PROGRAM AND RESULTS

A total of 54 soil samples were collected, including quality control samples and analyzed for organochlorine pesticides by EPA Method 8081A.

3.1.1 Analytical Results

The organochlorine pesticide (OCP) analytical results are summarized in Table 3-1 for each sample location. The raw analytical data are provided in Appendix B

The following pesticides were detected at least once in soil samples:

- 4,4'-DDD (maximum concentration of 0.71 mg/kg)
- 4,4'-DDE (maximum concentration of 2.7 mg/kg)
- 4,4'-DDT (maximum concentration of 5.3 mg/kg)
- Aldrin (maximum concentration of 0 005 mg/kg)
- Chlordane (maximum concentration of 4.2 mg/kg)
- Dieldrin (maximum concentration of 0.23 mg/kg)
- Heptachlor (maximum concentration of 0 004 mg/kg)
- Lindane (maximum concentration of 0 013 mg/kg)

The highest concentration of each pesticide was detected in surface soil samples (0- to 0 5-feet bgs) The frequency of detection for OCPs in surface soil samples was as follows:

- 4,4' DDE (30/52 or 58 percent)
- 4,4'-DDD (22/52 or 42 percent)
- 4,4'-DDT (39/52 or 75 percent)
- Aldrin (1/52 or 2 percent)
- Chlordane (45/52 or 87 percent)
- Dieldrin (10/52 or 22 percent)
- Heptachlor (1/52 or 2 percent)
- Lindane (1/52 or 2 percent)

Only low levels of OCPs were detected in samples 2-feet bgs The OCPs detected and the frequencies of detection in subsurface soil samples were as follows:

- Chlordane (10/52 or 19 percent)
- Dieldrin (20/52 or 38 percent)

As can be seen from the above data, the OCPs detected, the reported soil concentration and the frequency of detection all substantially decrease with depth.

3.2 Data Validation

This section summarizes the findings of the validation of 56 soil samples and 2 water samples pursuant to the U.S. EPA National Functional Guidelines for Laboratory Data Review (U S EPA 1994) These initial samples were collected on January 13 and January 15, 2003. The second round of sampling was conducted on March 10 2003 Associated Laboratories in Orange California analyzed all samples. The samples were analyzed for organochlorine pesticides (EPA 8081A)

The laboratory data were reviewed to evaluate compliance with this method and the quality of the data reported The following aspects of data quality were evaluated:

- Data Completeness
- Holding Times and Preservation
- Blanks
- Laboratory Control Samples
- Matrix Spike/Matrix Spike Duplicates
- Initial Calibration
- Calibration Verification
- Surrogate Spikes
- Compound Quantitation
- Overall Assessment of Data

3.2 1 Documentation and Completeness

All samples were properly recorded on COC Records. All analyses were performed as requested on the chain-of-custody records

3.2.2 Timeliness and Holding Times

All samples were received by the laboratory and analyzed within established holding times The samples were preserved on ice in the field The samples remained preserved on ice until the transfer of custody at the laboratory

3.2.3 Initial Calibration and Continuing Calibration

The initial calibration demonstrated acceptable performance of the target compound list at the beginning of the analytical sequence and produced a linear calibration curve. All results were within the required limits. The calibration verification criteria were met for all analytes. All results were within required limits.

3.2.4 Method Blanks

The purpose of the laboratory method (or field) blank analysis is to determine the existence and magnitude of contamination resulting from laboratory (or field) activities. Method blanks were run at the required frequency. Organochlorine pesticides were not detected in the associated method blanks for the water analyses. Organochlorine pesticides were not detected in one method blank for soil Although two batches of soil samples were analyzed, only one soil blank was reported, and it is not clear which batch was associated with the reported blank Organochlorine pesticides were not detected in the equipment blank This indicates decontamination procedures were sufficient and cross-contamination did not occur

3.2.5 Laboratory Control Samples

The laboratory control sample (LCS) provides a measure of the accuracy of analytical results. This is accomplished by adding a known amount of a substance to a previously analyzed sample. The accuracy is measured by comparing the measured increase in the sample result to the known spiked amount. LCS were run at the required frequency. All percent recoveries were within the laboratory QC acceptance criteria for water and soil analyses. The raw data for the water was not presented, therefore, it was not reviewed.

3.2.6 Quality Control Samples

All percent recoveries were within the laboratory QC acceptance criteria for the soil samples. Matrix spike and matrix spike duplicate were not analyzed for the water samples. Consequently, matrix effects cannot be determined for these samples. DCB (Surr2) surrogate was outside acceptable limits for soil samples 406076 (CHER-4-0.5) and 406078 (CHER-5-0.5). The lab narrative states the surrogate for sample 406076 was outside limits due to matrix effects, but the sample was not flagged. The Blanks, LCSs, MS/MSD, and other surrogates were within control limits. Therefore, the data were acceptable. TCMX (Sur1) surrogate was outside the limits in water sample 406175 (CHER-EB). Also, DCB (Sur1) surrogate was outside limits in this sample. The lab narrative states the surrogate for sample 406175 was outside limits due to matrix effects, but the report references DCB (Surr2). DCB (Surr2) surrogate was outside limits in soil samples 417506 (CHER-B-8-0.5) and 417512 (CHER-B-14-0.5). The lab narrative states the surrogate for sample 541712 (typo: should be 417512) was outside limits due to matrix effects, but the sample was not flagged. The Blanks, LCSs, MS/MSD, and other surrogates were within control limits. Therefore, the data were acceptable.

3.2.7 Field and Quality Control Sample Raw Data Review

The raw data were reviewed to verify acceptable calculations of sample results reported by the laboratory. Reporting limits were adjusted if the sample was diluted. The sample values were reported correctly by using the wet weight. The data are valid and usable.

3.2.8 Data Assessment

Based on the above results, the data were acceptable for intended use.

4.0 HUMAN HEALTH SCREENING EVALUATION

This section presents the Human Health Screening Evaluation for organochlorine pesticides detected in soil. The Human Health Screening Evaluation utilizes maximum concentrations of identified chemicals of potential concern (COPCs) to estimate contaminant intakes through the ingestion, dermal contact and inhalation routes of exposure. These estimated chemical intakes are evaluated for potential carcinogenic risks and noncarcinogenic health hazards using health-based toxicity criteria developed by the EPA and State of California (Office of Environmental Health Hazard Assessment (OEHHA)). This human health screening evaluation is health-protective, in that residential (unrestricted) land use is considered, regardless of the current or future intended uses of the property.

4 1 Exposure Pathways and Media of Concern

This section discusses the conceptual site model (CSM) in light of existing contamination (i.e., COPCs), identifies the receptors of concern, and identifies all relevant potential exposure pathways.

4 1.1 Conceptual Site Model

Consistent with DTSC Preliminary Endangerment Assessment Guidance (DTSC 1999) for performing Human Health Screening Evaluations it was assumed that the site was completely uncovered and that site soils were available for direct contact In the future children attending school at this site may be exposed to COPCs in soil through incidental ingestion, dermal contact, and inhalation of suspended soil particulates In accordance with PEA guidance, health effects were conservatively evaluated for a residential receptor Estimated carcinogenic risks were evaluated for a combined child and adult over an assumed 30-year exposure period Noncarcinogenic health effects were evaluated for a child since this is a sensitive receptor and would maximize potential exposures

4.1.2 Soil Exposure Pathways

COPCs in soil include organochlorine pesticides Lead was previously identified as a COPC on-site and was evaluated as part of the Preliminary Environmental Assessment (PEA) conducted for the site (URS, 2003). Potential residential exposure to organochlorine pesticides was evaluated through incidental ingestion and dermal contact Exposures by these two routes were estimated according to the following equations

<u>Intake of Soil Contaminants</u>

$$\text{Incidental Ingestion Intake (mg/kg-day)} = \frac{C_s \times IngR \times EF \times ED \times CF_1}{BW \times AT}$$

Where,

C_s	=	Maximum reported COPC soil concentration mg/kg
IngR	=	Adult soil ingestion rate, 100 mg/day (DTSC 1999)
	=	Child ingestion rate 200 mg/day (DTSC 1999)
EF	=	Residential exposure frequency 350 days/year (DTSC 1999)
ED	=	Adult exposure duration, 24 years (DTSC 1999)
	=	Child exposure duration 6 years (DTSC 1999)
CF_1	=	Conversion factor, 1×10^{-6} kg/mg
BW	=	Adult body weight, 70 kg
	=	Child body weight, 15 kg
AT	=	Averaging time, days
	=	ED * 365 days/year for noncarcinogens
	=	70 years * 365 days/year for carcinogens

$$\text{Dermal Contact Intake (mg/kg-day)} = \frac{C_s \times SA \times AF \times CF_1 \times EF \times ED}{BW \times AT}$$

Where,

C_s	=	Maximum reported COPC soil concentration, mg/kg
SA	=	Adult skin surface area for exposure, 5700 cm^2 (DTSC 2000)
	=	Child skin surface area for exposure, 2900 cm^2 (DTSC 2000)
AF	=	Adult soil-to-skin adherence factor, 0 07 mg/cm^2 (DTSC 2000)
	=	Child soil-to-skin adherence factor 0 2 mg/cm^2 (DTSC 2000)
CF_1	=	Conversion factor 1 x 10^{-6} kg/mg
EF	=	Adult exposure frequency, 100 days/year (DTSC 2000)
	=	Child exposure frequency, 350 days/year (DTSC 2000)
ED	=	Adult exposure duration, 24 years (DTSC 1999)
	=	Child exposure duration 6 years (DTSC 1999)
BW	=	Adult body weight 70 kg
	=	Child body weight 15 kg
AT	=	Averaging time, days
	=	ED * 365 days/year for noncarcinogens
	=	70 years * 365 days/year for carcinogens

4 1 3 Water Exposure Pathways

Groundwater impacts from the site are considered extremely unlikely and the groundwater pathway was not evaluated further in this human health screening assessment.

4 1.4 Air Exposure Pathways

Potential residential exposure to organochlorine pesticides detected in soil was evaluated for inhalation of suspended soil particulates Exposure through the inhalation route was estimated according to the following equation:

$$\text{Inhalation Intake (mg/kg-day)} = \frac{C_a \times InhR \times EF \times ED}{BW \times AT}$$

Where,

C_a	=	Estimated COPC concentration in air, mg/m^3
InhR	=	Adult inhalation rate, 20 m^3/day (DTSC 1999)
	=	Child inhalation rate, 10 m^3/day (DTSC 1999)
EF	=	Residential exposure frequency, 350 days/year (DTSC 1999)

ED	=	Adult exposure duration, 24 years (DTSC 1999)
	=	Child exposure duration, 6 years (DTSC 1999)
BW	=	Adult body weight, 70 kg
	=	Child body weight, 15 kg
AT	=	Averaging time, days
	=	ED * 365 days/year for noncarcinogens
	=	70 years * 365 days/year for carcinogens

For inhalation of soil particulates, air concentrations were estimated using the EPA Particulate Emission Factor (PEF) approach, as documented in EPA's Soil Screening Guidance. The PEF is defined by the following equation:

$$PEF(m^3/kg) = Q/C \times \left(\frac{3{,}600 s/h}{0.036 \times (1-V) \times (Um/Ut)^3 \times F(x)} \right)$$

Where,

Q/C	=	Inverse of mean concentration at the center of a 0.5-acre square source 68.81 g/m^2-s per kg/m^3 (for the Los Angeles Area)
V	=	Fraction of vegetative cover (0.5 (50%), default value)
Um	=	Mean annual wind speed, 4.69 m/s, default
Ut	=	Equivalent threshold value of windspeed at 7 m 11.32 m/s, default
F(x)	=	Function dependent on Um/Ut, 0.194 default

Based on the regional-specific Q/C for the Los Angeles area, the PEF was estimated to be 1.0E+09 m^3/kg. Then, the air concentration of suspended soil COPCs (mg/m^3) is equal to the maximum reported soil concentration (mg/kg) divided by the PEF (m^3/kg)

4.2 Exposure Concentrations and Chemicals

This section identifies the COPCs and estimates the concentration of each COPC in each medium of concern (e.g., soil air or water) to which receptors may be exposed

The following pesticides were detected at least once in site soil samples:

- 4,4'-DDD (maximum concentration of 0.71 mg/kg)
- 4,4'-DDE (maximum concentration of 2.7 mg/kg)
- 4,4'-DDT (maximum concentration of 5.3 mg/kg)
- Aldrin (maximum concentration of 0.005 mg/kg)
- Chlordane (maximum concentration of 4.2 mg/kg)
- Dieldrin (maximum concentration of 0.23 mg/kg)
- Heptachlor (maximum concentration of 0.004 mg/kg)
- Lindane (maximum concentration of 0.013 mg/kg)

Table 4-1 presents a summary of the OCPs detected in surface (0- to 0 5-feet bgs) and subsurface (2-feet bgs) soil samples The highest concentration of each pesticide was detected in surface soil samples At 2-feet bgs, only low levels of chlordane, 4,4'-DDD, 4,4'-DDE 4,4'-DDT and dieldrin were detected For the purposes of this human health screening evaluation, potential carcinogenic risks and noncarcinogenic health hazards were estimated 1) for surface soils using the maximum reported soil concentrations detected on-site; and 2) for subsurface soils at 2-feet bgs in order to assist decision-makers regarding the depth of future soil removal

4 3 Toxicity Values

This section describes the process of characterizing the relationship between the exposure to an agent and the incidence of adverse health effects in exposed populations In a quantitative carcinogenic risk assessment, the dose-response relationship of a carcinogen is expressed in terms of a slope factor (oral) or unit risk (inhalation), which are used to estimate the probability of risk of cancer associated with a given exposure pathway. Cancer slope factors and unit risk factors as published by Cal-EPA (2003) and EPA (Integrated Risk Information System (IRIS)) were used in this human health risk assessment.

For noncarcinogenic effects, toxicity data developed from animal or human studies are typically used to develop noncancer acceptable levels, or reference doses (RfDs) A chronic reference dose is defined as an estimate of a daily exposure for the human population including sensitive subpopulations that is likely to be without appreciable risk of deleterious effects during a lifetime The oral chronic reference doses as published in IRIS or EPA s Health Effects Assessment Summary Tables (HEAST), were used in this evaluation Inhalation reference doses were calculated from the Cal/EPA Reference Exposure Levels (RELs), as published by the OEHHA, 2002 If an REL was unavailable for a particular chemical, the inhalation reference dose from IRIS or HEAST was used.

Table 4-2 summarizes the cancer slope factors reference doses and data source for each COPC evaluated in this human health screening evaluation.

4 4 Risk Characterization Summary

This section describes the approach used to assess the potential carcinogenic risk and noncarcinogenic health hazards for the populations of concern represented by the chemical contaminants in soil at the site Potential carcinogenic effects were estimated from the predicted intakes and chemical-specific dose-response information. Potential noncarcinogenic effects were estimated by comparing the predicted intakes of COPCs to their respective toxicity criteria (i e inhalation reference doses (RfD_i)).

4.4 1 Noncarcinogenic Health Effects for Soil Contaminants

In order to estimate the potential effects from exposure to multiple COPCs, the hazard index (HI) approach was used. The HI is defined as the summation of the hazard quotients for each COPC for each route of exposure, and is represented by the following equation:

$$HI = \frac{\text{Predicted Dose}_a}{RfD_a} + \frac{\text{Predicted Dose}_b}{RfD_b} + \quad + \frac{\text{Predicted Dose}_i}{RfD_i}$$

A total HI less than or equal to unity is indicative of acceptable levels of exposure for chemicals assumed to exhibit additive health effects. To be truly additive in effect, chemicals must affect the same target organ system or result in the same critical toxic endpoint A HI

less than or equal to 1.0 suggests that adverse health effects would not be expected following a lifetime of exposure, even in sensitive members of the population.

4.4.2 Carcinogenic Health Effects for Soil Contaminants

Quantitative estimates of upper-bound incremental cancer risk due to site-related contamination were evaluated for each COPC according to the following equation:

$$R_i = Intake_i \times SF_i$$

Where,

R_i = Estimated incremental risk of cancer associated with the ith chemical

$Intake_i$ = Intake or lifetime average daily dose for the ith chemical mg/kg-day

SF_i = Cancer slope factor for the ith chemical $(mg/kg\text{-}day)^{-1}$

Carcinogenic risk was assumed to be additive and was estimated by summing the upper-limit incremental cancer risk for all carcinogenic COPCs

4.4.3 Site Specific Risks and Hazards

The residential noncarcinogenic health hazards and carcinogenic risks associated with exposure to surface soils from ingestion, dermal contact, and inhalation of suspended soil particulates are summarized in Tables 4-3 and 4-4, respectively Detailed risk and hazard calculations are included in Appendix C The residential hazard index for exposure to maximum reported concentrations of pesticides in site surface soil was 0.4, which is below the DTSC level of concern (HI = 1), and is indicative of no potential adverse health effects from exposure to site soils This estimated hazard was primarily attributable to chlordane (approximately 41 per cent of the total hazard), dieldrin (approximately 15 per cent of the total hazard), and 4,4'-DDT (approximately 35 per cent of the total hazard).

The total excess carcinogenic risk from ingestion of surface soil dermal contact with surface soil and inhalation of suspended surface soil particulates was 2.17E-05 This risk is above the DTSC point of departure (i.e., a risk of one-in-one-million or 1E-06) but within the risk management range defined by regulatory agencies (1E-06 to 1E-04) Consequently the total site risk is considered unacceptable under an unrestricted residential land use scenario This estimated risk was primarily attributable to chlordane (approximately 45 per cent of the total risk), dieldrin (approximately 30 per cent of the total risk) 4,4'-DDT (approximately 15 per cent of the total risk) and 4,4'-DDE (approximately 8 per cent of the total risk).

Tables 4-5 and 4-6 summarize the noncarcinogenic health hazards and carcinogenic risks associated with exposure to subsurface soils (2-feet bgs) from ingestion dermal contact and inhalation of soil particulates. The residential hazard index associated with exposure to subsurface soils was 0.09 which is well below the DTSC level of concern. The total excess cancer risk associated with exposure to subsurface soils was 6E-06 which is above the DTSC point of departure but well within the risk management range Based on the above results, unacceptable carcinogenic risk is only associated with site surface soils between 0- and 0.5-feet bgs.

4.4.4 Uncertainty Analysis

The noncarcinogenic health hazard and carcinogenic risk associated with OCPs in soil from incidental ingestion, dermal contact, and inhalation of suspended particulate were based on the maximum reported soil concentrations detected in samples collected immediately adjacent to the home's foundation. Pesticide application could have extended laterally out into the yard area, with higher OCP concentrations potentially occurring Since a data gap exists regarding the presence of OCPs in the yards away from the building foundations the potential risks and hazards may remain unchanged, or could be even higher.

In order to better define the potential site-specific risks and identify those sample locations requiring additional step-out investigation, sample location-specific risks and hazards were estimated. Specifically, the total hazard and risk from OCPs were calculated for each sample at each depth and are summarized in Tables 4-7 and 4-8 for the OCP Investigation and Supplemental OCP Investigation results, respectively Based on the sample-specific results, elevated cancer risks were associated with the following sample locations:

- CHER-4-2 (cancer risk = 5 9E-06)
- CHER-5-0 5 (cancer risk = 1 1E-05)
- CHER-6-0 5 (cancer risk = 4 4E-06)
- CHER-B-6-0 5 (cancer risk = 4 3E-06)
- CHER-B-7-0 5 (cancer risk = 1 4E-05)
- CHER-B-13-0 5 (cancer risk = 4 9E-06)
- CHER-B-14-0 5 (cancer risk = 6 1E-06)

Based on these results, HERD recommends that step-out and step-down samples be collected at CHER-4-2 and step-out samples be collected at CHER-5-0 5, CHER-6-0 5 CHER-B-6-0 5 CHER-B-7-0 5 CHER-B-13-0 5 and CHER-B-14-0 5

5.0 CONCLUSIONS AND RECOMMENDATIONS

Based on the results of the OCP investigation and the human health screening evaluation, the following site-specific findings were made:

1 For a hypothetical residential receptor the total noncarcinogenic health hazard for exposure to surface soils was 0 4, which is below the DTSC level of concern (HI = 1) and considered an acceptable health hazard

2. For a hypothetical residential receptor, the total excess cancer risk for exposure to surface soils was 2.2E-05, which is above the DTSC point of departure (1E-06) but within the risk management range (1E-06 to 1E-04) This estimated site risk is considered unacceptable.

3 For a hypothetical residential receptor, the total noncarcinogenic health hazard for exposure to subsurface soils (2-feet bgs) was 0 09, which is well below the DTSC level of concern (HI = 1).

4. For a hypothetical residential receptor, the total excess cancer risk for exposure to subsurface soils (2-feet bgs) was 6 5E-06 which is above the DTSC point of departure (1E-06) but within the risk management range (1E-06 to 1E-04) This estimated site risk is considered elevated and warrants further evaluation.

Based on the above conclusions, DTSC recommends the following:

1 Based on the sample-specific risk calculations, HERD recommends that step-out and step-down samples be collected at CHER-4-2 to better define the vertical and lateral extent of OCP contamination.

2. Based on the sample-specific risk calculations, HERD recommends that step-out samples be collected at the following locations to better define the lateral extent of OCP contamination:

- CHER-5-0.5 (cancer risk = 1.1E-05)
- CHER-6-0.5 (cancer risk = 4.4E-06)
- CHER-B-6-0.5 (cancer risk = 4.3E-06)
- CHER-B-7-0.5 (cancer risk = 1.4E-05)
- CHER-B-13-0.5 (cancer risk = 4.9E-06)
- CHER-B-14-0.5 (cancer risk = 6.1E-06)

6.0 REFERENCES

Cal/EPA 2002. Chronic Reference Exposure levels (RELs), California Environmental Protection Agency, Office of Environmental Health Hazard Assessment (OEHHA), September 2002

Cal/EPA 2003. Toxicity Criteria Database. Cancer Potency Values. California Environmental Protection Agency, Office of Environmental Health Hazard Assessment (OEHHA). January 30, 2003

DTSC 1999. Preliminary Endangerment Assessment Guidance Manual, A Guidance Manual for Evaluating Hazardous Substance Release Sites. State of California, Environmental Protection Agency. Department of Toxic Substances Control, June 1999

DTSC 2000. Draft Guidance for the dermal Exposure Pathway. Department of Toxic Substances Control, Human and Ecological Risk Division, January 7, 2000

DTSC 2002. Draft Protocol for Organochlorine Pesticide Sampling and Analysis at Residential Properties, Version 1, April 2002.

URS Corporation. September 27, 2003. Preliminary Endangerment Assessment. Cherokee Point Elementary School

U.S. EPA. 1994. Contract Laboratory Program National Functional Guidelines for Organic Data Review. EPA 540/R-94/012

Tables

Table 3-1

Organochlorine Pesticide Data Summary

Organochlorine Pesticide	Organochlorine Pesticide Concentrations at Each Sample Location									
	CHER-1-0.5 (mg/kg)	CHER-1-2 (mg/kg)	CHER-2-0.5 (mg/kg)	CHER-2-2 (mg/kg)	CHER-3-0.5 (mg/kg)	CHER-3-2 (mg/kg)	CHER-3-2-DUP (mg/kg)	CHER-4-0.5 (mg/kg)	CHER-4-2 (mg/kg)	CHER-5.0.5 (mg/kg)
4,4'-DDD	ND	ND	0.050	0.005	0.014	ND	ND	ND	0.015	0.705
4,4'-DDE	0.021	ND	0.053	0.006	0.062	0.018	0.009	0.065	0.012	0.745
4,4'-DDT	0.043	ND	0.046	0.009	0.105	0.032	0.015	0.087	0.022	5.260
Aldrin	ND	ND	ND	ND	ND	ND	ND	ND	ND	ND
Alpha BHC	ND	ND	ND	ND	ND	ND	ND	ND	ND	ND
Beta BHC	ND	ND	ND	ND	ND	ND	ND	ND	ND	ND
Chlordane	0.570	ND	0.788	0.055	0.395	0.071	0.034	0.178	0.214	0.340
Delta BHC	ND	ND	ND	ND	ND	ND	ND	ND	ND	ND
Dieldrin	0.045	ND	0.058	0.004	0.068	0.018	0.009	0.080	0.193	0.226
Endosulfan I	ND	ND	ND	ND	ND	ND	ND	ND	ND	ND
Endosulfan II	ND	ND	ND	ND	ND	ND	ND	ND	ND	ND
Endosulfan sulfate	ND	ND	ND	ND	ND	ND	ND	ND	ND	ND
Endrin	ND	ND	ND	ND	ND	ND	ND	ND	ND	ND
Endrin aldehyde	ND	ND	ND	ND	ND	ND	ND	ND	ND	ND
Heptachlor	ND	ND	0.004	ND	ND	ND	ND	ND	ND	ND
Heptachlor epoxide	ND	ND	ND	ND	ND	ND	ND	ND	ND	ND
Lindane	ND	ND	ND	ND	ND	ND	ND	ND	ND	ND
Methoxychlor	ND	ND	ND	ND	ND	ND	ND	ND	ND	ND
Toxaphene	ND	ND	ND	ND	ND	ND	ND	ND	ND	ND

Table 3-1

Organochlorine Pesticide Data Summary

Organochlorine Pesticide	Organochlorine Pesticide Concentrations at Each Sample Location									
	CHER-5-2 (mg/kg)	CHER-6-0.5 (mg/kg)	CHER-6-2 (mg/kg)	CHER-7-0.5 (mg/kg)	CHER-7-2 (mg/kg)	CHER-8-0.5 (mg/kg)	CHER-8-2 (mg/kg)	CHER-9-0.5 (mg/kg)	CHER-9-2 (mg/kg)	CHER-10-0.5 (mg/kg)
4,4'-DDD	0.015	0.021	ND	0.009	ND	ND	ND	ND	ND	0.005
4,4'-DDE	0.144	0.055	0.014	0.008	ND	0.055	ND	0.013	ND	0.014
4,4'-DDT	0.753	0.124	0.026	0.033	ND	0.151	ND	0.012	ND	0.029
Aldrin	ND	ND	ND	0.005	ND	ND	ND	ND	ND	ND
Alpha BHC	ND	ND	ND	ND	ND	ND	ND	ND	ND	ND
Beta BHC	ND	ND	ND	ND	ND	ND	ND	ND	ND	ND
Chlordane	0.031	0.281	0.013	0.177	ND	0.269	0.017	0.056	ND	0.172
Delta BHC	ND	ND	ND	ND	ND	ND	ND	ND	ND	ND
Dieldrin	0.017	0.130	0.007	0.034	ND	0.075	ND	0.032	ND	0.028
Endosulfan I	ND	ND	ND	ND	ND	ND	ND	ND	ND	ND
Endosulfan II	ND	ND	ND	ND	ND	ND	ND	ND	ND	ND
Endosulfan sulfate	ND	ND	ND	ND	ND	ND	ND	ND	ND	ND
Endrin	ND	ND	ND	ND	ND	ND	ND	ND	ND	ND
Endrin aldehyde	ND	ND	ND	ND	ND	ND	ND	ND	ND	ND
Heptachlor	ND	ND	ND	ND	ND	ND	ND	ND	ND	ND
Heptachlor epoxide	ND	ND	ND	ND	ND	ND	ND	ND	ND	ND
Lindane	ND	ND	ND	ND	ND	ND	ND	ND	ND	ND
Methoxychlor	ND	ND	ND	ND	ND	ND	ND	ND	ND	ND
Toxaphene	ND	ND	ND	ND	ND	ND	ND	ND	ND	ND

Table 3-1

Organochlorine Pesticide Data Summary

Organochlorine Pesticide	Organochlorine Pesticide Concentrations at Each Sample Location								
	CHER-10-2 (mg/kg)	CHER-11-0.5 (mg/kg)	CHER-11-0.5-DUP (mg/kg)	CHER-11-2 (mg/kg)	~~CHER-12-0.5~~ (mg/kg)	CHER-12-2 (mg/kg)	CHER-13-0.5 (mg/kg)	~~CHER-13-2~~ (mg/kg)	~~CHER-14-0.5~~ (mg/kg)
4,4'-DDD	ND	ND	0.018	ND	ND	ND	0.021	ND	ND
4,4'-DDE	ND	0.009	0.009	ND	ND	ND	0.402	0.010	0.007
4,4'-DDT	ND	0.021	0.024	ND	ND	ND	0.504	0.013	0.018
Aldrin	ND	ND	ND	ND	ND	ND	ND	ND	ND
Alpha BHC	ND	ND	ND	ND	ND	ND	ND	ND	ND
Beta BHC	ND	ND	ND	ND	ND	ND	ND	ND	ND
Chlordane	ND	0.462	0.349	ND	ND	ND	0.258	0.095	0.063
Delta BHC	ND	ND	ND	ND	ND	ND	ND	ND	ND
Dieldrin	ND	0.008	0.015	ND	0.052	0.014	ND	ND	0.004
Endosulfan I	ND	ND	ND	ND	ND	ND	ND	ND	ND
Endosulfan II	ND	ND	ND	ND	ND	ND	ND	ND	ND
Endosulfan sulfate	ND	ND	ND	ND	ND	ND	ND	ND	ND
Endrin	ND	ND	ND	ND	ND	ND	ND	ND	ND
Endrin aldehyde	ND	ND	ND	ND	ND	ND	ND	ND	ND
Heptachlor	ND	ND	ND	ND	ND	ND	ND	ND	ND
Heptachlor epoxide	ND	ND	ND	ND	ND	ND	ND	ND	ND
Lindane	ND	ND	ND	ND	ND	ND	ND	ND	ND
Methoxychlor	ND	ND	ND	ND	ND	ND	ND	ND	ND
Toxaphene	ND	ND	ND	ND	ND	ND	ND	ND	ND

Table 3-1

Organochlorine Pesticide Data Summary

Organochlorine Pesticide	Organochlorine Pesticide Concentrations at Each Sample Location								
	CHER-14-2 (mg/kg)	CHER-15-0.5 (mg/kg)	CHER-15-2 (mg/kg)	CHER-16-0.5 (mg/kg)	CHER-16-2 (mg/kg)	CHER-B-1-0.5 (mg/kg)	CHER-B-2-0.5	CHER-B-3-0.5	CHER-B-4-0.5
4,4'-DDD	ND	ND	ND	ND	ND	0.015	ND	0.017	0.012
4,4'-DDE	ND	0.028	ND	0.012	ND	0.072	0.018	0.038	0.026
4,4'-DDT	ND	0.031	ND	0.018	ND	0.220	0.024	0.170	0.099
Aldrin	ND	ND	ND	ND	ND	ND	ND	ND	ND
Alpha BHC	ND	ND	ND	ND	ND	ND	ND	ND	ND
Beta BHC	ND	ND	ND	ND	ND	ND	ND	ND	ND
Chlordane	ND	0.370	ND	0.363	ND	0.880	0.630	0.320	0.180
Delta BHC	ND	ND	ND	ND	ND	ND	ND	ND	ND
Dieldrin	ND	ND	ND	ND	ND	0.050	ND	0.011	0.010
Endosulfan I	ND	ND	ND	ND	ND	ND	ND	ND	ND
Endosulfan II	ND	ND	ND	ND	ND	ND	ND	ND	ND
Endosulfan sulfate	ND	ND	ND	ND	ND	ND	ND	ND	ND
Endrin	ND	ND	ND	ND	ND	ND	ND	ND	ND
Endrin aldehyde	ND	ND	ND	ND	ND	ND	ND	ND	ND
Heptachlor	ND	ND	ND	ND	ND	ND	ND	ND	ND
Heptachlor epoxide	ND	ND	ND	ND	ND	ND	ND	ND	ND
Lindane	ND	ND	ND	ND	ND	ND	ND	ND	ND
Methoxychlor	ND	ND	ND	ND	ND	ND	ND	ND	ND
Toxaphene	ND	ND	ND	ND	ND	ND	ND	ND	ND

Table 3-1

Organochlorine Pesticide Data Summary

Organochlorine Pesticide	Organochlorine Pesticide Concentrations at Each Sample Location							
	CHER-B-5-0.5	CHER-B-6-0.5	CHER-B-7-0.5	CHER-B-8-0.5 (mg/kg)	CHER-B-9-0.5 (mg/kg)	CHER-B-10-0.5 (mg/kg)	CHER-B-11-0.5 (mg/kg)	CHER-B-12-0.5 (mg/kg)
4,4'-DDD	0.016	ND	ND	ND	ND	ND	ND	ND
4,4'-DDE	0.110	0.021	0.037	0.022	0.013	0.049	0.008	0.057
4,4'-DDT	0.160	0.039	0.085	0.065	0.024	0.061	0.029	0.012
Aldrin	ND	ND	ND	ND	ND	ND	ND	ND
Alpha BHC	ND	ND	ND	ND	ND	ND	ND	ND
Beta BHC	ND	ND	ND	ND	ND	ND	ND	ND
Chlordane	1.100	0.990	4.200	0.820	0.320	0.330	0.260	0.050
Delta BHC	ND	ND	ND	ND	ND	ND	ND	ND
Dieldrin	0.018	0.070	0.160	0.024	0.020	0.100	0.010	ND
Endosulfan I	ND	ND	ND	ND	ND	ND	ND	ND
Endosulfan II	ND	ND	ND	ND	ND	ND	ND	ND
Endosulfan sulfate	ND	ND	ND	ND	ND	ND	ND	ND
Endrin	ND	ND	ND	ND	ND	ND	ND	ND
Endrin aldehyde	ND	ND	ND	ND	ND	ND	ND	ND
Heptachlor	ND	ND	ND	ND	ND	ND	ND	ND
Heptachlor epoxid	ND	ND	ND	ND	ND	ND	ND	ND
Lindane	ND	ND	ND	ND	ND	ND	ND	ND
Methoxychlor	ND	ND	ND	ND	ND	ND	ND	ND
Toxaphene	ND	ND	ND	ND	ND	ND	ND	ND

Table 3-1

Organochlorine Pesticide Data Summary

Organochlorine Pesticide	Organochlorine Pesticide Concentrations at Each Sample Location						
	CHER-B-13-0.5 (mg/kg)	CHER-B-14-0.5 (mg/kg)	CHER-B-15-0.5 (mg/kg)	CHER-B-16-0.5 (mg/kg)	CHER-B-17-0.5 (mg/kg)	CHER-B-17-0.5-DUP (mg/kg)	CHER-B-18-0.5 (mg/kg)
4,4'-DDD	0.130	ND	0.010	0.009	0.006	ND	0.019
4,4'-DDE	2.700	0.083	0.030	0.025	0.009	0.009	0.038
4,4'-DDT	2.600	0.150	0.046	0.021	0.035	0.026	0.070
Aldrin	ND	ND	ND	ND	ND	ND	ND
Alpha BHC	ND	ND	ND	ND	ND	ND	ND
Beta BHC	ND	ND	ND	ND	ND	ND	ND
Chlordane	0.730	2.600	0.440	ND	0.430	0.390	0.760
Delta BHC	ND	ND	ND	ND	ND	ND	ND
Dieldrin	ND	ND	0.012	0.009	ND	0.009	ND
Endosulfan I	ND	ND	ND	ND	ND	ND	ND
Endosulfan II	ND	ND	ND	ND	ND	ND	ND
Endosulfan sulfate	ND	ND	ND	ND	ND	ND	ND
Endrin	ND	ND	ND	ND	ND	ND	ND
Endrin aldehyde	ND	ND	ND	ND	ND	ND	ND
Heptachlor	ND	ND	ND	ND	ND	ND	ND
Heptachlor epoxide	ND	ND	ND	ND	ND	ND	ND
Lindane	ND	ND	ND	ND	ND	ND	0.013
Methoxychlor	ND	ND	ND	ND	ND	ND	ND
Toxaphene	ND	ND	ND	ND	ND	ND	ND

Table 3-1

Organochlorine Pesticide Data Summary

Organochlorine Pesticide	CHER-B-19-0.5 (mg/kg)	CHER-B-19-0.5-DUP (mg/kg)	CHER-B-20-0.5 (mg/kg)	Maximum Concentration All Depths (mg/kg)	Maximum Concentration (0- to 0.5-Feet) (mg/kg)	Maximum Concentration (2-Feet bgs) (mg/kg)
4,4'-DDD	ND	ND	ND	0.705	0.705	0.015
4,4'-DDE	0.009	0.014	ND	2.700	2.700	0.144
4,4'-DDT	0.024	0.031	0.011	5.260	5.260	0.753
Aldrin	ND	ND	ND	0.005	0.005	ND
Alpha BHC	ND	ND	ND	ND	ND	ND
Beta BHC	ND	ND	ND	ND	ND	ND
Chlordane	0.210	0.200	0.030	4.200	4.200	0.214
Delta BHC	ND	ND	ND	ND	ND	ND
Dieldrin	ND	ND	ND	0.226	0.226	0.193
Endosulfan I	ND	ND	ND	ND	ND	ND
Endosulfan II	ND	ND	ND	ND	ND	ND
Endosulfan sulfate	ND	ND	ND	ND	ND	ND
Endrin	ND	ND	ND	ND	ND	ND
Endrin aldehyde	ND	ND	ND	ND	ND	ND
Heptachlor	ND	ND	ND	0.004	0.004	ND
Heptachlor epoxide	ND	ND	ND	ND	ND	ND
Lindane	ND	ND	ND	0.013	0.013	ND
Methoxychlor	ND	ND	ND	ND	ND	ND
Toxaphene	ND	ND	ND	ND	ND	ND

Table 4-1

Maximum Reported Soil Concentrations
of Organochlorine Pesticides, (0- to 2-Feet bgs)

Organochlorine Pesticide	Maximum Concentration All Depths (mg/kg)	Maximum Concentration (0- to 0.5-Feet) (mg/kg)	Maximum Concentration (2-Feet bgs) (mg/kg)
4,4'-DDD	0.705	0.705	0.015
4,4'-DDE	2.700	2.700	0.144
4,4'-DDT	5.260	5.260	0.753
Aldrin	0.005	0.005	ND
Alpha BHC	ND	ND	ND
Beta BHC	ND	ND	ND
Chlordane	4.200	4.200	0.214
Delta BHC	ND	ND	ND
Dieldrin	0.226	0.226	0.193
Endosulfan I	ND	ND	ND
Endosulfan II	ND	ND	ND
Endosulfan sulfate	ND	ND	ND
Endrin	ND	ND	ND
Endrin aldehyde	ND	ND	ND
Heptachlor	0.004	0.004	ND
Heptachlor epoxide	ND	ND	ND
Lindane	0.013	0.013	ND
Methoxychlor	ND	ND	ND
Toxaphene	ND	ND	ND

Table 4-2

Toxicity Criteria

Chemical of Potential Concern (COPC)	Criteria for Noncarcinogens				Criteria for Carcinogens			
	Oral RfD (mg/kg-day)	Source	Inhalation RfD (mg/kg-day)	Source	Oral Slope Factor $(mg/kg\text{-}day)^{-1}$	Source	Inhalation Slope Factor $(mg/kg\text{-}day)^{-1}$	Source
Organochlorine Pesticides								
Aldrin	3.00E-05	*a*	3.00E-05	*b*	1.70E+01	*c*	1.70E+01	*c*
Chlordane	5.00E-04	*a*	2.00E-04	*a*	1.30E+00	*c*	1.20E+00	*c*
4,4'-DDD	5.00E-04	*d*	5.00E-04	*d*	2.40E-01	*c*	2.40E-01	*c*
4,4'-DDE	5.00E-04	*d*	5.00E-04	*d*	3.40E-01	*c*	3.40E-01	*c*
4,4'-DDT	5.00E-04	*a*	5.00E-04	*b*	3.40E-01	*c*	3.40E-01	*c*
Dieldrin	5.00E-05	*a*	5.00E-05	*b*	1.60E+01	*c*	1.60E+01	*c*
Heptachlor	5.00E-04	*a*	5.00E-04	*b*	4.10E+00	*c*	4.10E+00	*c*
Lindane (γ–Hexachlorocyclohexane)	3.00E-04	*a*	3.00E-04	*b*	1.10E+00	*c*	1.10E+00	*c*

a USEPA Integrated Risk Information System (IRIS).
b Route-to-route extrapolation from the oral RfD.
c Cal/EPA, Office of Environmental Health Hazard Assessment (OEHHA), California Cancer Potency Values.
d Use the toxicity criteria for 4,4'-DDT, based on structural similarity.

Table 4-3

Hazard Summary for Surface Soils (0- to 0.5-Feet bgs)

COPCs	Hazards from Site Soils			
	Hazard from Incidental Ingestion	Hazard from Dermal Contact	Hazard from Inhalation of Soil Particulates	
Organochlorine Pesticides				
Aldrin	2.1E-03	3 2E-04	1 1E-07	0 547012
Chlordane	1 1E-01	1 6E-02	1 3E-05	27 57121
4,4'-DDD	1 8E-02	2 7E-03	9 0E-07	4 627723
4 4'-DDE	6 9E-02	1.0E-02	3 5E-06	17 7232
4,4'-DDT	1 3E-01	2 0E-02	6 7E-06	34 52741
Dieldrin	5 8E-02	8 7E-03	2 9E-06	14 83497
Heptachlor	1 0E-04	1 5E-05	5 1E-09	0 026257
Lindane (γ–Hexachlorocyclohexane)	5.5E-04	8 4E-05	2 8E-08	0 142223
				100
Total Hazard	3.9E-01	5.9E-02	2.8E-05	
		Hazard Index :	0.4	

Table 4-4

Risk Summary for Surface Soil (0- to 0.5-feet bgs)

COPCs	Risks from Site Soils			
	Cancer Risk from Incidental Ingestion	Cancer Risk from Dermal Contact	Cancer Risk from Inhalation of Soil Particulates	
Organochlorine Pesticides				
Aldrin	1 3E-07	1 6E-08	1 3E-11	0 704385
Chlordane	8 6E-06	1 0E-06	7 51E-10	45 24608
4,4'-DDD	2 7E-07	3 1E-08	2 52E-11	1 40214
4 4'-DDE	1 4E-06	1 7E-07	1 37E-10	7 607358
4 4'-DDT	2 8E-06	3 3E-07	2 66E-10	14 82026
Dieldrin	5 7E-06	6 7E-07	5 39E-10	29 96537
Heptachlor	2 6E-08	3 0E-09	2 44E-12	0 135905
Lindane (γ–Hexachlorocyclohexane)	2 2E-08	2 7E-09	2 13E-12	0 118502
				100
Pathway-Specific Risk	1.9E-05	2.2E-06	1.7E-09	
		Total Risk	2.1E-05	

Table 4-5

Hazard Summary for Subsurface Soils (2-feet bgs)

COPCs	Hazards from Site Soils		
	Hazard from Incidental Ingestion	Hazard from Dermal Contact	Hazard from Inhalation of Soil Particulates
Organochlorine Pesticides			
Chlordane	5 5E-03	8 3E-04	6 8E-07
4,4'-DDD	3 8E-04	5 8E-05	1 9E-08
4,4'-DDE	3 7E-03	5 6E-04	1 8E-07
4,4'-DDT	1 9E-02	2 9E-03	9 6E-07
Dieldrin	4 9E-02	7 4E-03	2 5E-06
Total Hazard	7.8E-02	1.2E-02	4.3E-06
		Hazard Index :	0.09

Table 4-6

Risk Summary for Subsurface Soils (2- to 4-feet bgs)

COPCs	Risks from Site Soils		
	Cancer Risk from Incidental Ingestion	Cancer Risk from Dermal Contact	Cancer Risk from Inhalation of Soil Particulates
Organochlorine Pesticides			
Chlordane	4 4E-07	5 2E-08	3 83E-11
4,4'-DDD	5 7E-09	6 7E-10	5 36E-13
4 4'-DDE	7 7E-08	9 1E-09	7 30E-12
4,4'-DDT	4 0E-07	4 7E-08	3 81E-11
Dieldrin	4 8E-06	5 7E-07	4 60E-10
Pathway-Specific Risk	5.8E-06	6.8E-07	5.4E-10
		Total Risk	6.5E-06

Figures

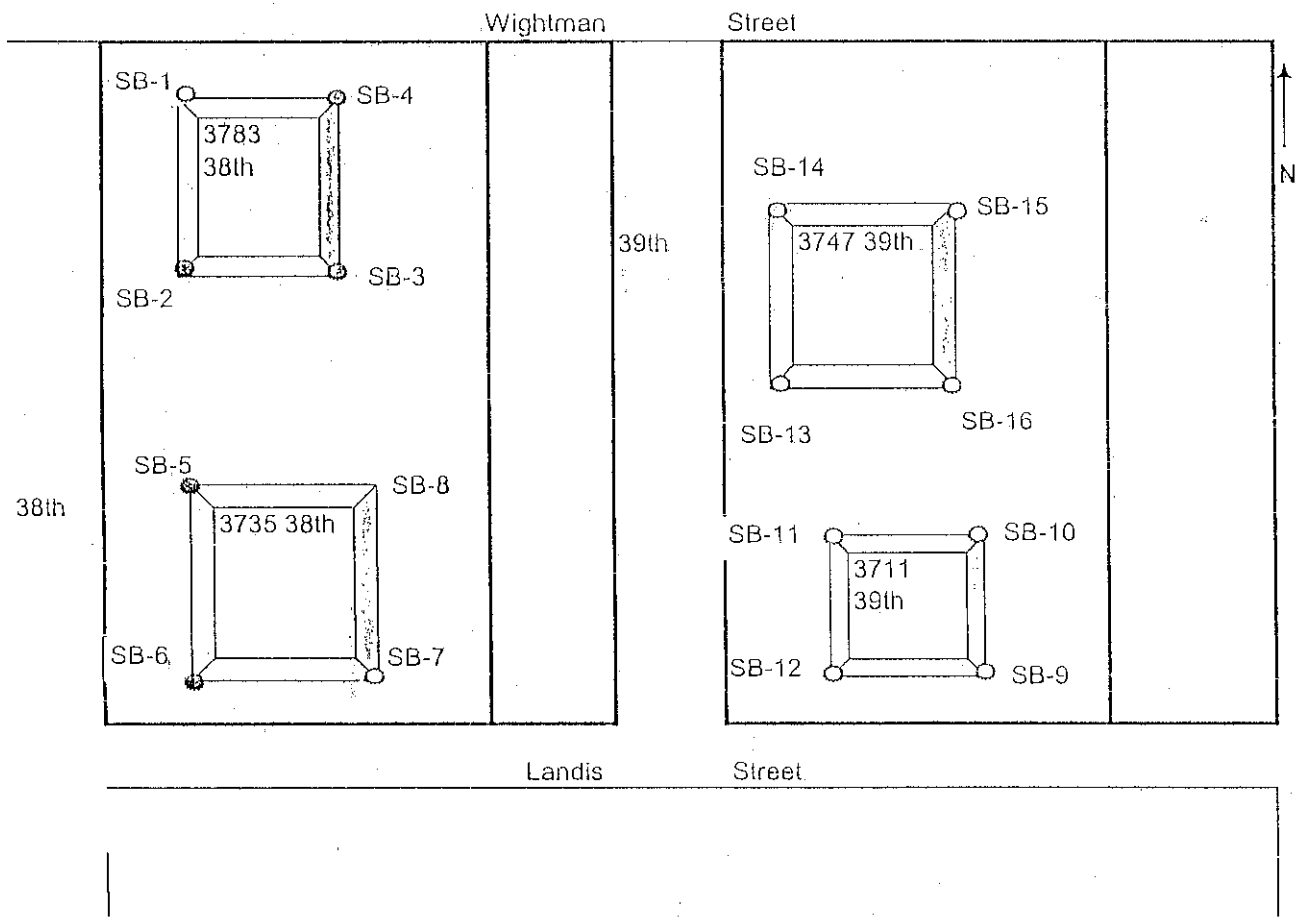

LEGEND

○ Discrete Home Perimeter Foundation Soil Boring

◎ Elevated chlordane detections

FIGURE 1
Initial Soil Sampling Locations

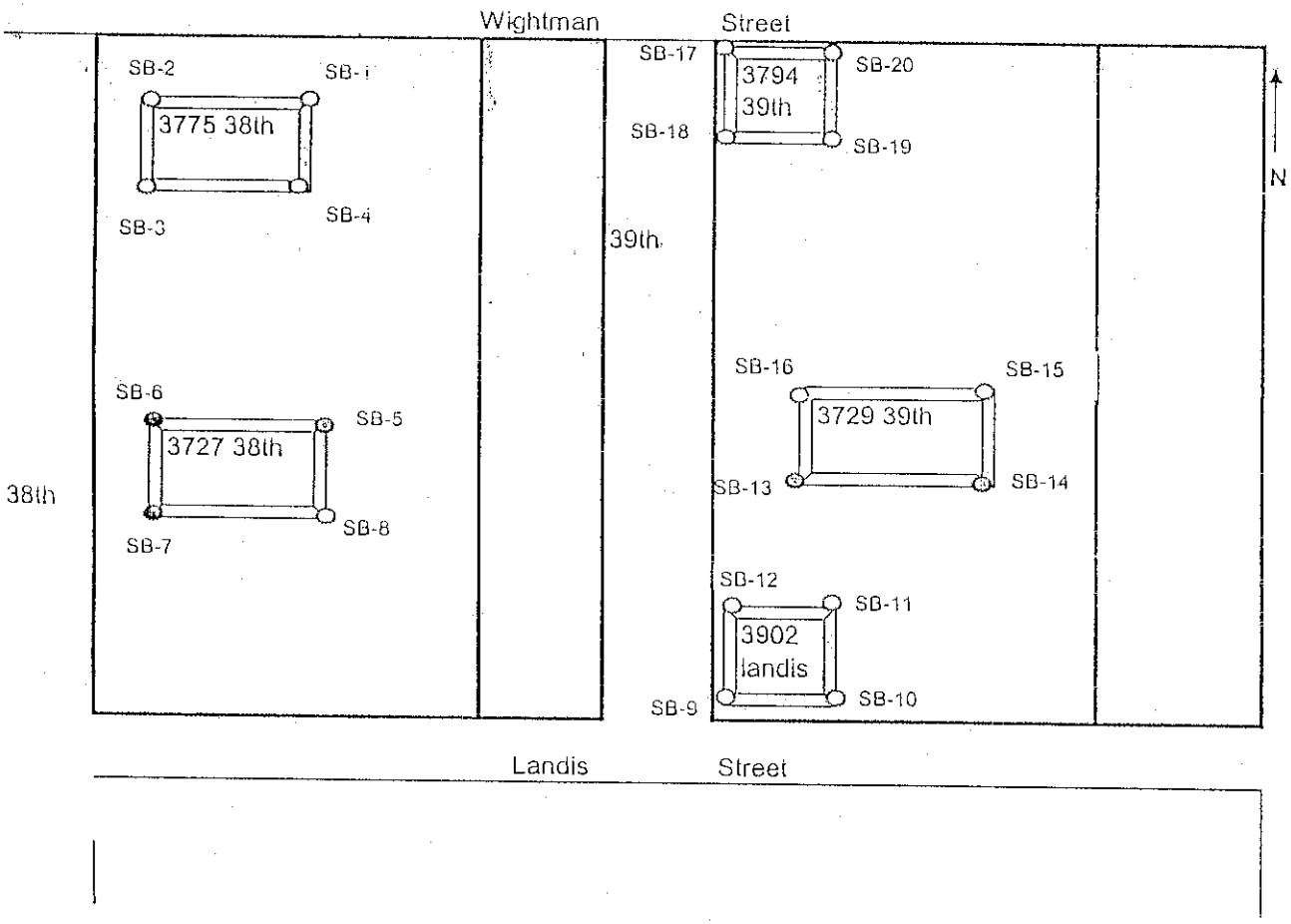

LEGEND

○ Discrete Home Perimeter Foundation Soil Boring

◎ Elevated chlordane detections

FIGURE 2
Second Round of Soil Sampling Locations

Appendix A

Field Log Sheets

DTSC Residential Pesticide Study Log Sheet

Site Name: Cherokee

E

Sampler Name(s): Robbie Morris (RM); Juan Osuna (JO); Tim Sevrean (J
Jenny Jones (JJ); Peter Garcia (PG); Javier Hinojosa (JH

N 4 3 1 2 S

W

Date: 1/13/03

#	Sample ID	Sample Depth (ft)	Sample Time	Sampler	Comments
1	CHER-1-0.5	0.5	11.29	TJ	very rocky soil - refusal
2	CHER-1-2	2	12.08	RM	1.5' @ 120° SE of surface bom
~~3~~	~~CHER-1-~~				
3	CHER-2-0.5	0.5	11.26	JO	2' sample is 2.5' N of 0.5 sample
~~4~~	CHER-2-2	2	11.35	JO	refusal ~~at~~ at 2.5'
~~6~~	~~CHER-2-4~~	~~4~~			
5	CHER-3-0.5	0.5	12.09	JS	1.5' → 160° S of GPS
6	CHER-4-0.5	0.5	12.12	JO RM	32' 70° E of GPS #1
7	CHER-3-2	2	12.39	~~JO~~ RM	12.1' 240° SW of 4-0.5
8	CHER-4-2	2			
9	CHER-5-0.5	0.5			6 inches N of flag
10	CHER-5-2	2			
11	CHER-6-0.5	0.5			6 inches N of flag
12	CHER-6-2	2			
13	CHER-7-0.5	0.5			right at flag
14	CHER-7-2	2	15.22	JO	~~[illegible]~~
15	CHER-8-0.5	0.5			6 inches S. of flag
16	CHER-8-2	2			
17	CHER-3-2D	2		RM	Duplicate
18	CHER-9-0.5	0.5	1555	JO	SE corner
19	CHER-9-2	2	1557	JO	"
20	CHER-10-0.5	0.5	1556	JS	NE corner
21	CHER-10-2	2	1558	JS	"
22	CHER-11-0.5	0.5	1200	JS	NW corner
23	CHER-11-0.5D	0.5	1201	JS	"
24	CHER-12-0.5	0.5	1559	JO	SW corner
25	CHER-12-2	2	1600	JO	" "

DTSC Residential Pesticide Study Log Sheet

Site Name: Chirokee

Sampler Name(s): See page 1

Date: 1/13/03

#	Sample ID	Sample Depth (ft)	Sample Time	Sampler	Comments
26	CHER-11-2	2	1603	JS	NW Corner
27	CHER-13-0.5	0.5	1605	JO	SW Corner
28	CHER-14-0.5	0.5	1605	JS	NW Corner
29	CHER-14-2	2	1608	JS	" "
30	CHER-13-2	2	1630	JO	SW Corner 2 ft N of flag
31	CHER-15-0.5	0.5	1615	RM	NE Corner
32	CHER-16-0.5	0.5	1636	JO	SE Corner
33	CHER-15-2	2	1651	JS	NE Corner
34	CHER-16-2	2	1644	JO	SE Corner
35	CHER-R	—	1646	RM	decon. rinsate

DTSC Residential Pesticide Study Log Sheet

Site Name: Cherokee

Sampler Name(s): Robbie Morris (RM), Jennifer Jones (JJ

Date: 3-10-03

#	Sample ID	Sample Depth (ft)	Sample Time	Sampler	Comments
1	CHER-B-1-0.5	0.5	9 15	JJ	3775 38th St
2	CHER-B-2-0.5		9 20	RM	
3	-3-0.5		9.25	JJ	
4	-4-0.5		9.31	JJ	
5	-5-0.5		9 39	RM	3727 38th St
6	-6-0.5		9.45	RM	
7	-7-0.5		9 50	RM	
8	-8-0.5		9.55	RM	
9	-9-0.5		10.15	JJ	3462 Landis St
10	-10-0.5		10:18	RM	locations marked
11	-11-0.5		10 20	JJ	by SDUSD
12	-12-0.5		10.27	JJ	
13	-13-0.5		10 30		3729 39th St
14	-14-0.5		10.31		
15	-15-0.5		10.40		
16	-16-0.5		10.45	RM	
17	-17-0.5		11 20		3794 39th St
18	-17-0.5D		11 22		Dup. sample
19	-18-0.5		11.32	JJ	
20	-19-0.5		11 25	JJ	
21	-20-0.5D		11 32	JJ	Duplicate
22	20-0.5		11 45	JJ	

Appendix B

Organochlorine Pesticide Analytical Results

ASSOCIATED LABORATORIES

NARRATIVE

Date: February 25, 2003

Narrative for Lab Request LR 105179

Client Project Identification:
Project: Cherokee Pesticide Study
This narrative includes all samples as shown on the attached Lab Request final report.

Analyses Requested:

- EPA 8081 – Organochlorine Pesticides by GC*

*Analysis was run on both solid and water matrices.

Data Validation:

Holding Times
All EPA designated holding times were met.

Calibration
Initial calibration criteria were met for all analytes. Initial and Continuing Calibration Check samples were run at the required frequency All results were within required limits.

Quality Control Samples
DCB surrogate recovery was outside limits in Sample #076 & 175, due to matrix interference
Corrective Action: All Method Blanks, LCS, and MS/MSD were within control limits, and the bulk of surrogate recoveries conformed Therefore, the data was acceptable, and no corrective action was necessary

Other Anomalies or Comments
The reporting limit (DLR) is adjusted if dilution of the sample is necessary

ASSOCIATED LABORATORIES
806 North Batavia - Orange, California 92868 - 714/771-6900 FAX 714/538-1209

CLIENT Dept. of Toxic Substances (9290)
ATTN: Robbie Morris
1011 N. Grandview Ave
Glendale, CA 91201

LAB REQUEST 105179
REPORTED 02/13/2003
RECEIVED 01/15/2003

PROJECT Cherokee Pesticide Study

SUBMITTER Client

RECEIVED

COMMENTS

This laboratory request covers the following listed samples which were analyzed for the parameters indicated on the attached Analytical Result Report. All analyses were conducted using the appropriate methods as indicated on the report. This cover letter is an integral part of the final report.

Order No.	Client Sample Identification
406069	CHER-1-0.5
406070	CHER-1-2
406071	CHER-2-0.5
406072	CHER-2-2
406073	CHER-3-0.5
406074	CHER-3-2
406075	CHER-3-2D
406076	CHER-4-0.5
406077	CHER-4-2
406078	CHER-5-0.5
406079	CHER-5-2
406080	CHER-6-0.5
406081	CHER-6-2

Thank you for the opportunity to be of service to your company. Please feel free to call if there are any questions regarding this report or if we can be of further service.

ASSOCIATED LABORATORIES by

Edward S. Behare, PhD
Vice President

NOTE Unless notified in writing all samples will be discarded by appropriate disposal protocol 30 days from date reported.

The reports of the Associated Laboratories are confidential property of our clients and may not be reproduced or used for publication in part or in full without our written permission. This is for the mutual protection of the public, our clients and ourselves.

TESTING & CONSULTING
Chemical
Microbiological
Environmental

CLIENT Dept. of Toxic Substances (9290)
ATTN: Robbie Morris
1011 N Grandview Ave
Glendale, CA 91201

LAB REQUEST 105179

REPORTED 02/13/2003
RECEIVED 01/15/2003

PROJECT Cherokee Pesticide Study

SUBMITTER Client

COMMENTS

This laboratory request covers the following listed samples which were analyzed for the parameters indicated on the attached Analytical Result Report. All analyses were conducted using the appropriate methods as indicated on the report This cover letter is an integral part of the final report.

Order No.	Client Sample Identification
406082	CHER-8- 5
406083	CHER-8-2
406084	CHER-7- 5
406085	CHER-7-2
406086	CHER-9-0 5
406087	CHER-10-0 5
406088	CHER-9-2
406089	CHER-10-2
406090	CHER-11-0 5
406091	CHER-11-0 5D
406092	CHER-12-0 5
406093	CHER-12-2
406094	CHER-11-2
406095	CHER-13-0 5
406096	CHER-14-0 5
406097	CHER-15-0 5
406098	CHER-14-2
406099	CHER-13-2
406100	CHER-16-0 5
406101	CHER-16-2
406102	CHER-15-2

Thank you for the opportunity to be of service to your company Please feel free to call if there are any questions regarding this report or if we can be of further service

ASSOCIATED LABORATORIES by

Edward S. Benare, Ph.D
Vice President

NOTE. Unless notified in writing all samples will be discarded by appropriate disposal protocol 30 days from date reported.

The reports of the Associated Laboratories are confidential property of our clients and may not be reproduced or used for publication in part or in full without our written permission This is for the mutual protection of the public, our clients and ourselves

TESTING & CONSULTING
Chemical
Microbiological
Environmental

CLIENT Dept. of Toxic Substances (9290)
ATTN: Robbie Morris
1011 N. Grandview Ave.
Glendale, CA 91201

LAB REQUEST 105179

REPORTED 02/13/2003
RECEIVED 01/15/2003

PROJECT Cherokee Pesticide Study

SUBMITTER Client

COMMENTS

This laboratory request covers the following listed samples which were analyzed for the parameters indicated on the attached Analytical Result Report. All analyses were conducted using the appropriate methods as indicated on the report. This cover letter is an integral part of the final report.

Order No.	Client Sample Identification
406103	CHER-R
406104	Laboratory Method Blank-S
406108	Laboratory Method Blank-W
406175	CHER-EB

Thank you for the opportunity to be of service to your company. Please feel free to call if there are any questions regarding this report or if we can be of further service.

ASSOCIATED LABORATORIES by,

Edward S. Behare, Ph D
Vice President

NOTE Unless notified in writing all samples will be discarded by appropriate disposal protocol 30 days from date reported.

The reports of the Associated Laboratories are confidential property of our clients and may not be reproduced or used for publication in part or in full without our written permission. This is for the mutual protection of the public, our clients and ourselves.

TESTING & CONSULTING
Chemical
Microbiological
Environmental

ASSOCIATED LABORATORIES
806 N. Batavia • Orange, CA 92868
(714) 771-6900 • Fax: (714) 538-1209

105179

CHAIN OF CUSTODY RECORD

Date 1/13/03 Page 1 of 3

CLIENT DTSC
ADDRESS 1011 N Grandview Ave.
Glendale, CA 91201

PROJECT MANAGER Robbie Morris
PHONE NUMBER 818-551-2941

PROJECT NAME
Cherokee Pesticide Study

SAMPLERS: (Signature) [signature]

Samples Intact Yes ✓ No ___
County Seals Intact Yes ___ No ✓
Sample Ambient ___ Cooled ✓ Frozen ___
Same Day ___ 24 Hr. ___
Regular ✓ 48 Hr. ___

SAMPLE NUMBER	LOCATION DESCRIPTION	DATE	TIME	SAMPLE TYPE WATER	AIR	SOLID	NO OF CNTNRS	SUSP. CONTAM.	TESTS REQUIRED
CHER-1-0.5	3783 38th St NW Corner	1/13/03	11:29			X	1		8081A
CHER-1-2	" NW Corner		12:08						
CHER-2-0.5	" SW Corner		11:26						
CHER-2-2	" SW Corner		11:35						
CHER-3-0.5	" SE Corner		12:09						
CHER-3-2	" SE Corner		12:37						
CHER-3-2D	" SW Corner		1250						
CHER-4-0.5	" NE Corner		12:12						
CHER-4-2	" NE Corner		1:20						
CHER-5-0.5	" N&W Corner		1:40						
CHER-5-2	" NW Corner		14:16						
CHER-6-0.5	" SW Corner		1:40						
CHER-6-2	" SW Corner		1400						

Relinquished by: (Signature) [signature]
Received by: (Signature) [signature] Date/Time 1/13/03 1250

Relinquished by: (Signature) [signature]
Received by Laboratory for analysis: (Signature) [signature] Date/Time 1/14/03 10:00

Special Instructions: Please return samples to DTSC after analysis. Please provide data package with results.

I hereby authorize the performance of the above indicated work. [signature]

DISTRIBUTION: White with report. Yellow to AL, Pink to Courier

ASSOCIATED LABORATORIES
806 N. Batavia • Orange, CA 92868
(714) 771-6900 • Fax: (714) 538-1209

105179

CHAIN OF CUSTODY RECORD

Date 1/13/03 Page 2 of 3

CLIENT: DTSC
ADDRESS: 1011 N. Grandview Ave, Glendale, CA 91201
PROJECT NAME: Cherokee Pesticide Study
PROJECT MANAGER: Robbie Morris
PHONE NUMBER: 818 551-2941
SAMPLERS: (Signature)

Samples Intact Yes ✓ No ___
County Seals Intact Yes ___ No ✓
Sample Ambient ___ Cooled ✓ Frozen ___
Same Day ___ 24 Hr. ___
Regular ✓ 48 Hr

SAMPLE NUMBER	LOCATION DESCRIPTION	DATE	TIME	SAMPLE TYPE: WATER	AIR	SOLID	NO OF CNTNRS	SUSP. CONTAM.	TESTS REQUIRED
CHER-8-.5	3735 38TH STR NE Corner	1/13/03	12:50			X	1	?	8081A
CHER 8-2	" " NE Corner		1405						
CHER 7-.5	" " SE Corner		1550						
CHER 7-2	" " " "		1552						
CHER-9-0.5	3711 39th St SE Corner		1555						
CHER-10-0.5	" " NE Corner		1556						
CHER-9-2	" " SE Corner		1557						
CHER-10-2	" " NE Corner		1558						
CHER-11-0.5	" " NW Corner		1600						
CHER-11-0.5D	" " NW Corner		1601						
CHER-12-0.5	" " SW Corner		1559						
CHER-12-2	" " SW Corner		1600						
CHER-11-2	" " NW Corner		1603						

Relinquished by: (Signature)
Received by: (Signature)
Date/Time 1-13-03 12:50

Relinquished by: (Signature)
Received by Laboratory for analysis: (Signature)
Date/Time 1/16/03 10:00

I hereby authorize the performance of the above indicated work.

Special Instructions: Please return samples to DTSC after analysis. Please provide data package with results.

DISTRIBUTION: White with report. Yellow to AL, Pink to Courier

ASSOCIATED LABORATORIES
806 N. Batavia • Orange, CA 92868
(714) 771-6900 • Fax: (714) 538-1209

105179

CHAIN OF CUSTODY RECORD

Date 1/13/03 Page 3 of 3

CLIENT: DTSC
ADDRESS: 1011 N. Grandview Ave, Glendale, CA 91201
PROJECT NAME: Cherokee Pesticide Study

PROJECT MANAGER: Robbie Morris
PHONE NUMBER: 818-551-2941
SAMPLERS: (Signature) [signature]

Samples Intact: Yes ✓ No ___
County Seals Intact: Yes ___ No ✓
Sample Ambient ___ Cooled ✓ Frozen ___
Same Day ___ 24 Hr. ___
Regular ✓ 48 Hr. ___

SAMPLE NUMBER	LOCATION DESCRIPTION	DATE	TIME	SAMPLE TYPE: WATER	AIR	SOLID	NO OF CNTNRS	SUSP. CONTAM.	TESTS REQUIRED
CHER-13-0.5	3747 39th st SW Corner	1/13/03	1605			X	1		8081A
CHER-14-0.5	3747 39th st NW Corner		1605						
CHER-15-0.5	" " NE Corner		1615						
CHER-14-2	" " NW Corner		1608						
CHER-13-2	" " SW Corner		1630						
CHER-16-0.5	" " SE Corner		1636						
CHER-16-2	" " SE Corner		1644						
CHER-15-2	" " NE Corner		1651						
CHER-R	decon rinseate sample		1646	X					

Relinquished by: (Signature) [signature] — Received by: (Signature) [signature] — Date/Time 1-13-03 1250

Relinquished by: (Signature) [signature] — Received by Laboratory for analysis: (Signature) [signature] — Date/Time 1/16/03

Special Instructions: Please return samples to DTSC after analysis. Please provide data package with results.

I hereby authorize the performance of the above indicated work.
[signature]

DISTRIBUTION: White with report. Yellow to AL, Pink to Courier

ASSOCIATED LABORATORIES
806 N. Batavia • Orange, CA 92868
(714) 771-6900 • Fax: (714) 538-1209

105179

CHAIN OF CUSTODY RECORD

Date 1/15/03 Page 1 of 1

CLIENT DTSC
ADDRESS 1011 N. Grandview Ave.
Glendale, CA 91201

PROJECT MANAGER Robbie Morris
PHONE NUMBER 818-551-2941
SAMPLERS: (Signature)

PROJECT NAME
Cherokee Pesticide Study

Samples Intact Yes ✓ No ___
County Seals Intact Yes ___ No ✓
Sample Ambient ✓ Cooled ___ Frozen ___
Same Day ✓ 24 Hr. ___
Regular ✓ 48 Hr. ___

SAMPLE NUMBER	LOCATION DESCRIPTION	DATE	TIME	SAMPLE TYPE WATER	AIR	SOLID	NO OF CNTNRS	SUSP. CONTAM.	TESTS REQUIRED
CHER-EB	Equipment blank - 5' auger	1/15/03	1650	X			1		8081A
									Add to
									Samples
									from
									1-15-03

Relinquished by: (Signature)
Received by: (Signature)
Date/Time 1/15/03 1700

Relinquished by: (Signature) 1-16-03 / 1320
Received by Laboratory for analysis: (Signature) Ken Hurst
Date/Time 1-16-03 11:30

Special Instructions: to Joe Sevcean 1-16-03 1320
Please add to other Samples for project + provide results w/ others

I hereby authorize the performance of the above indicated work.

DISTRIBUTION: White with report. Yellow to AL. Pink to Courier

ASSOCIATED LABORATORIES
QA REPORT FORM

Method : EPA 8081

QC Sample: 105179-406070

Matrix: SOLID

Date Analyzed : 02/10/03

Batch Date: 01/20/03 (pest 012003sB)

Applies to: LR 105179 (406069 thru 406082)

MATRIX SPIKE / MATRIX SPIKE DUPLICATE RESULTS

REPORTING UNITS = mg/Kg

Test	Sample Result	Spike Added	Spike Recovered		% Rec		RPD	QC Limits	
			MS	MSD	MS	MSD		RPD	% Rec
gamma-BHC (Lindane)	ND	0.100	0.105	0.111	105	111	5	35	50-135
Heptachlor	ND	0.100	0.104	0.106	104	106	1	35	50-135
Aldrin	ND	0.100	0.089	0.089	89	89	0	35	50-135
Dieldrin	ND	0.100	0.121	0.124	121	124	3	35	50-135
Endrin	ND	0.100	0.115	0.119	115	119	3	35	50-135
DDT	ND	0.100	0.118	0.113	118	113	4	35	50-135

ND = U - Not Detected
% Rec - MS & MSD = Percent Recovery of Matrix Spike & Matrix Spike Duplicate
RPD = Relative Percent Difference of Matrix Spike and Matrix Spike Duplicate Recoveries

LAB CONTROL SPIKE / LAB CONTROL SPIKE DUPLICATE RESULTS

REPORTING UNITS = mg/Kg

Test	Sample Result	Spike Added	Spike Recovered	% Rec LCS	QC Limits % Rec
gamma-BHC (Lindane)	ND	0.100	0.081	81	55-130
Heptachlor	ND	0.100	0.084	84	55-130
Aldrin	ND	0.100	0.066	66	55-130
Dieldrin	ND	0.100	0.117	117	55-130
Endrin	ND	0.100	0.115	115	55-130
DDT	ND	0.100	0.125	125	55-130

ND = U - Not Detected
% Rec - LCS = Percent Recovery of Lab Control Spike

METHOD BLANK = ALL ND

ASSOCIATED LABORATORIES
QA REPORT FORM

Method : EPA 8081

QC Sample: 105179-406102

Matrix: SOLID

Date Analyzed : 02/10/03

Batch Date: 01/24/03 (pest 012403s)

Applies to: LR 105179 (406083 thru 406102)

MATRIX SPIKE / MATRIX SPIKE DUPLICATE RESULTS

REPORTING UNITS = mg/Kg

Test	Sample Result	Spike Added	Spike Recovered		% Rec		RPD	QC Limits	
			MS	MSD	MS	MSD		RPD	% Rec
gamma-BHC (Lindane)	ND	0.100	0.075	0.074	75	74	1	35	50-135
Heptachlor	ND	0.100	0.079	0.077	79	77	1	35	50-135
Aldrin	ND	0.100	0.068	0.068	68	68	1	35	50-135
Dieldrin	ND	0.100	0.088	0.092	88	92	4	35	50-135
Endrin	ND	0.100	0.089	0.091	89	91	2	35	50-135
DDT	ND	0.100	0.102	0.109	102	109	7	35	50-135

ND = Not Detected

% Rec - MS & MSD = Percent Recovery of Matrix Spike & Matrix Spike Duplicate

RPD = Relative Percent Difference of Matrix Spike and Matrix Spike Duplicate Recoveries

LAB CONTROL SPIKE / LAB CONTROL SPIKE DUPLICATE RESULTS

REPORTING UNITS = mg/Kg

Test	Sample Result	Spike Added	Spike Recovered	% Rec LCS	QC Limits % Rec
gamma-BHC (Lindane)	ND	0.100	0.090	90	55-130
Heptachlor	ND	0.100	0.095	95	55-130
Aldrin	ND	0.100	0.082	82	55-130
Dieldrin	ND	0.100	0.097	97	55-130
Endrin	ND	0.100	0.096	96	55-130
DDT	ND	0.100	0.102	102	55-130

ND = Not Detected

% Rec - LCS = Percent Recovery of Lab Control Spike

METHOD BLANK = ALL ND

ASSOCIATED LABORATORIES
QA REPORT FORM

Method : EPA 8081/608

QC Sample: LCS / LCSD

Matrix: WATER

Analysis Date: 01/25/03

Batch Date: 01/20/03 (pest 012003w)

Applies to: LR 105222; LR 105291; LR 105179; and LR 105207

LAB CONTROL SPIKE / LAB CONTROL SPIKE DUPLICATE RESULTS

REPORTING UNITS = ug/L

Test	Sample Result	Spike Added	Spike Recovered		% Rec		RPD	QC Limits	
			LCS	LCSD	LCS	LCSD		RPD	% Rec
gamma-BHC (Lindane)	ND	0.50	0.60	0.62	120	123	3	35	55-130
Heptachlor	ND	0.50	0.54	0.56	109	112	3	35	55-130
Aldrin	ND	0.50	0.49	0.51	98	102	4	35	55-130
Dieldrin	ND	0.50	0.57	0.62	114	123	8	35	55-130
Endrin	ND	0.50	0.56	0.60	112	121	7	35	55-130
DDT	ND	0.50	0.55	0.57	110	114	4	35	55-130

Method Blank = All Non-Detect

% Rec - LCS & LCSD = Percent Recovery from Lab Control Spike & Lab Control Spike Duplicate

RPD = Relative Percent Difference of Lab Control Spike and Lab Control Spike Duplicate recoveries

Order #: 406069
Matrix: SOLID
Date Sampled: 01/13/2003
Time Sampled: 11:29
Sampled By:

Client: Dept of Toxic Substances
Client Sample ID: CHER-1-0 5

Analyte	Result	DF	DLR	Units	Date/Analyst	
8081A - Organochlorine Pesticides by GC						
4,4-DDD	ND	10	0.05	mg/Kg	02/10/03	SD
4,4-DDE	0 021	1	0.004	mg/Kg	02/10/03	SD
4,4-DDT	0 043	1	0.005	mg/Kg	02/10/03	SD
Aldrin	ND	1	0 004	mg/Kg	02/10/03	SD
Alpha BHC	ND	1	0 002	mg/Kg	02/10/03	SD
Beta BHC	ND	1	0 003	mg/Kg	02/10/03	SD
Chlordane	0 57	10	0 25	mg/Kg	02/10/03	SD
Delta BHC	ND	1	0 005	mg/Kg	02/10/03	SD
Dieldrin	0 045	1	0.003	mg/Kg	02/10/03	SD
Endosulfan I	ND	1	0.004	mg/Kg	02/10/03	SD
Endosulfan II	ND	1	0 004	mg/Kg	02/10/03	SD
Endosulfan sulfate	ND	1	0 004	mg/Kg	02/10/03	SD
Endrin	ND	1	0.004	mg/Kg	02/10/03	SD
Endrin aldehyde	ND	1	0 004	mg/Kg	02/10/03	SD
Heptachlor	ND	1	0 004	mg/Kg	02/10/03	SD
Heptachlor epoxide	ND	1	0 003	mg/Kg	02/10/03	SD
Lindane	ND	1	0 003	mg/Kg	02/10/03	SD
Methoxychlor	ND	1	0 025	mg/Kg	02/10/03	SD
Toxaphene	ND	1	0 25	mg/Kg	02/10/03	SD

Surrogates		Units	Control Limits
DCB(Sur2)	97	%	55 - 130
TCMX (Sur1)	85	%	50 - 125

DLR = Detection limit for reporting purposes. ND = Not Detected below indicated detection limit. DF = Dilution Factor

Order #: 406070 **Client:** Dept. of Toxic Substances
Matrix: SOLID **Client Sample ID:** CHER-1-2
Date Sampled: 01/13/2003
Time Sampled: 12:08
Sampled By:

Analyte	Result	DF	DLR	Units	Date/Analyst	
8081A - Organochlorine Pesticides by GC						
4,4-DDD	ND	1	0.005	mg/Kg	02/10/03	SD
4,4-DDE	ND	1	0.004	mg/Kg	02/10/03	SD
4,4-DDT	ND	1	0.005	mg/Kg	02/10/03	SD
Aldrin	ND	1	0.004	mg/Kg	02/10/03	SD
Alpha BHC	ND	1	0.002	mg/Kg	02/10/03	SD
Beta BHC	ND	1	0.003	mg/Kg	02/10/03	SD
Chlordane	ND	1	0.025	mg/Kg	02/10/03	SD
Delta BHC	ND	1	0.005	mg/Kg	02/10/03	SD
Dieldrin	ND	1	0.003	mg/Kg	02/10/03	SD
Endosulfan I	ND	1	0.004	mg/Kg	02/10/03	SD
Endosulfan II	ND	1	0.004	mg/Kg	02/10/03	SD
Endosulfan sulfate	ND	1	0.004	mg/Kg	02/10/03	SD
Endrin	ND	1	0.004	mg/Kg	02/10/03	SD
Endrin aldehyde	ND	1	0.004	mg/Kg	02/10/03	SD
Heptachlor	ND	1	0.004	mg/Kg	02/10/03	SD
Heptachlor epoxide	ND	1	0.003	mg/Kg	02/10/03	SD
Lindane	ND	1	0.003	mg/Kg	02/10/03	SD
Methoxychlor	ND	1	0.025	mg/Kg	02/10/03	SD
Toxaphene	ND	1	0.25	mg/Kg	02/10/03	SD

Surrogates		Units	Control Limits
DCB(Sur2)	100	%	55 - 130
TCMX (Sur1)	84	%	50 - 125

DLR = Detection limit for reporting purposes. ND = Not Detected below indicated detection limit. DF = Dilution Factor

Order #: 406071
Matrix: SOLID
Date Sampled: 01/13/2003
Time Sampled: 11:26
Sampled By:

Client: Dept. of Toxic Substances
Client Sample ID: CHER-2-0 5

Analyte	Result	DF	DLR	Units	Date/Analyst	
8081A - Organochlorine Pesticides by GC						
4,4-DDD	0 050	1	0 005	mg/Kg	02/10/03	SD
4,4-DDE	0 053	1	0.004	mg/Kg	02/10/03	SD
4,4-DDT	0 046	1	0 005	mg/Kg	02/10/03	SD
Aldrin	ND	1	0 004	mg/Kg	02/10/03	SD
Alpha BHC	ND	1	0.002	mg/Kg	02/10/03	SD
Beta BHC	ND	1	0 003	mg/Kg	02/10/03	SD
Chlordane	0 788	10	0 25	mg/Kg	02/10/03	SD
Delta BHC	ND	1	0 005	mg/Kg	02/10/03	SD
Dieldrin	0 058	1	0.003	mg/Kg	02/10/03	SD
Endosulfan I	ND	1	0.004	mg/Kg	02/10/03	SD
Endosulfan II	ND	1	0.004	mg/Kg	02/10/03	SD
Endosulfan sulfate	ND	1	0 004	mg/Kg	02/10/03	SD
Endrin	ND	1	0 004	mg/Kg	02/10/03	SD
Endrin aldehyde	ND	1	0 004	mg/Kg	02/10/03	SD
Heptachlor	0 004	1	0 004	mg/Kg	02/10/03	SD
Heptachlor epoxide	ND	1	0 003	mg/Kg	02/10/03	SD
Lindane	ND	1	0 003	mg/Kg	02/10/03	SD
Methoxychlor	ND	1	0.025	mg/Kg	02/10/03	SD
Toxaphene	ND	1	0 25	mg/Kg	02/10/03	SD

Surrogates		Units	Control Limits
DCB(Sur2)	121	%	55 - 130
TCMX (Sur1)	83	%	50 - 125

DLR = Detection limit for reporting purposes. ND = Not Detected below indicated detection limit. DF = Dilution Factor

Order #: 406072 Client: Dept of Toxic Substances
Matrix: SOLID Client Sample ID: CHER-2-2
Date Sampled: 01/13/2003
Time Sampled: 11:35
Sampled By:

Analyte	Result	DF	DLR	Units	Date/Analyst	
8081A - Organochlorine Pesticides by GC						
4,4-DDD	0.005	1	0.005	mg/Kg	02/10/03	SD
4,4-DDE	0.006	1	0.004	mg/Kg	02/10/03	SD
4,4-DDT	0.009	1	0.005	mg/Kg	02/10/03	SD
Aldrin	ND	1	0.004	mg/Kg	02/10/03	SD
Alpha BHC	ND	1	0.002	mg/Kg	02/10/03	SD
Beta BHC	ND	1	0.003	mg/Kg	02/10/03	SD
Chlordane	0.055	1	0.025	mg/Kg	02/10/03	SD
Delta BHC	ND	1	0.005	mg/Kg	02/10/03	SD
Dieldrin	0.004	1	0.003	mg/Kg	02/10/03	SD
Endosulfan I	ND	1	0.004	mg/Kg	02/10/03	SD
Endosulfan II	ND	1	0.004	mg/Kg	02/10/03	SD
Endosulfan sulfate	ND	1	0.004	mg/Kg	02/10/03	SD
Endrin	ND	1	0.004	mg/Kg	02/10/03	SD
Endrin aldehyde	ND	1	0.004	mg/Kg	02/10/03	SD
Heptachlor	ND	1	0.004	mg/Kg	02/10/03	SD
Heptachlor epoxide	ND	1	0.003	mg/Kg	02/10/03	SD
Lindane	ND	1	0.003	mg/Kg	02/10/03	SD
Methoxychlor	ND	1	0.025	mg/Kg	02/10/03	SD
Toxaphene	ND	1	0.25	mg/Kg	02/10/03	SD

Surrogates		Units	Control Limits
DCB(Sur2)	127	%	55 - 130
TCMX (Sur1)	100	%	50 - 125

DLR = Detection limit for reporting purposes. ND = Not Detected below indicated detection limit. DF = Dilution Factor

Order #: 406073 **Client:** Dept. of Toxic Substances
Matrix: SOLID **Client Sample ID:** CHER-3-0.5
Date Sampled: 01/13/2003
Time Sampled: 12:09
Sampled By:

Analyte	Result	DF	DLR	Units	Date/Analyst	
8081A - Organochlorine Pesticides by GC						
4,4-DDD	0.014	1	0.005	mg/Kg	02/10/03	SD
4,4-DDE	0.062	1	0.004	mg/Kg	02/10/03	SD
4,4-DDT	0.105	1	0.005	mg/Kg	02/10/03	SD
Aldrin	ND	1	0.004	mg/Kg	02/10/03	SD
Alpha BHC	ND	1	0.002	mg/Kg	02/10/03	SD
Beta BHC	ND	1	0.003	mg/Kg	02/10/03	SD
Chlordane	0.395	10	0.25	mg/Kg	02/10/03	SD
Delta BHC	ND	1	0.005	mg/Kg	02/10/03	SD
Dieldrin	0.068	1	0.003	mg/Kg	02/10/03	SD
Endosulfan I	ND	1	0.004	mg/Kg	02/10/03	SD
Endosulfan II	ND	1	0.004	mg/Kg	02/10/03	SD
Endosulfan sulfate	ND	1	0.004	mg/Kg	02/10/03	SD
Endrin	ND	1	0.004	mg/Kg	02/10/03	SD
Endrin aldehyde	ND	1	0.004	mg/Kg	02/10/03	SD
Heptachlor	ND	1	0.004	mg/Kg	02/10/03	SD
Heptachlor epoxide	ND	1	0.003	mg/Kg	02/10/03	SD
Lindane	ND	1	0.003	mg/Kg	02/10/03	SD
Methoxychlor	ND	1	0.025	mg/Kg	02/10/03	SD
Toxaphene	ND	1	0.25	mg/Kg	02/10/03	SD
Surrogates				**Units**	**Control Limits**	
DCB(Sur2)	119			%	55 - 130	
TCMX (Sur1)	91			%	50 - 125	

DLR = Detection limit for reporting purposes. ND = Not Detected below indicated detection limit, DF = Dilution Factor

Order #: 406074 Client: Dept. of Toxic Substances
Matrix: SOLID Client Sample ID: CHER-3-2
Date Sampled: 01/13/2003
Time Sampled: 12:39
Sampled By:

Analyte	Result	DF	DLR	Units	Date/Analyst	
8081A - Organochlorine Pesticides by GC						
4,4-DDD	ND	1	0.005	mg/Kg	02/10/03	SD
4,4-DDE	0.018	1	0.004	mg/Kg	02/10/03	SD
4,4-DDT	0.032	1	0.005	mg/Kg	02/10/03	SD
Aldrin	ND	1	0.004	mg/Kg	02/10/03	SD
Alpha BHC	ND	1	0.002	mg/Kg	02/10/03	SD
Beta BHC	ND	1	0.003	mg/Kg	02/10/03	SD
Chlordane	0.071	1	0.025	mg/Kg	02/10/03	SD
Delta BHC	ND	1	0.005	mg/Kg	02/10/03	SD
Dieldrin	0.018	1	0.003	mg/Kg	02/10/03	SD
Endosulfan I	ND	1	0.004	mg/Kg	02/10/03	SD
Endosulfan II	ND	1	0.004	mg/Kg	02/10/03	SD
Endosulfan sulfate	ND	1	0.004	mg/Kg	02/10/03	SD
Endrin	ND	1	0.004	mg/Kg	02/10/03	SD
Endrin aldehyde	ND	1	0.004	mg/Kg	02/10/03	SD
Heptachlor	ND	1	0.004	mg/Kg	02/10/03	SD
Heptachlor epoxide	ND	1	0.003	mg/Kg	02/10/03	SD
Lindane	ND	1	0.003	mg/Kg	02/10/03	SD
Methoxychlor	ND	1	0.025	mg/Kg	02/10/03	SD
Toxaphene	ND	1	0.25	mg/Kg	02/10/03	SD

Surrogates		Units	Control Limits
DCB(Sur2)	121	%	55 - 130
TCMX (Sur1)	86	%	50 - 125

DLR = Detection limit for reporting purposes. ND = Not Detected below indicated detection limit. DF = Dilution Factor

Order #: 406075
Matrix: SOLID
Date Sampled: 01/13/2003
Time Sampled: 12:50
Sampled By:

Client: Dept. of Toxic Substances
Client Sample ID: CHER-3-2D

Analyte	Result	DF	DLR	Units	Date/Analyst	
8081A - Organochlorine Pesticides by GC						
4,4-DDD	ND	1	0.005	mg/Kg	02/10/03	SD
4,4-DDE	0.009	1	0.004	mg/Kg	02/10/03	SD
4,4-DDT	0.015	1	0.005	mg/Kg	02/10/03	SD
Aldrin	ND	1	0.004	mg/Kg	02/10/03	SD
Alpha BHC	ND	1	0.002	mg/Kg	02/10/03	SD
Beta BHC	ND	1	0.003	mg/Kg	02/10/03	SD
Chlordane	0.034	1	0.025	mg/Kg	02/10/03	SD
Delta BHC	ND	1	0.005	mg/Kg	02/10/03	SD
Dieldrin	0.009	1	0.003	mg/Kg	02/10/03	SD
Endosulfan I	ND	1	0.004	mg/Kg	02/10/03	SD
Endosulfan II	ND	1	0.004	mg/Kg	02/10/03	SD
Endosulfan sulfate	ND	1	0.004	mg/Kg	02/10/03	SD
Endrin	ND	1	0.004	mg/Kg	02/10/03	SD
Endrin aldehyde	ND	1	0.004	mg/Kg	02/10/03	SD
Heptachlor	ND	1	0.004	mg/Kg	02/10/03	SD
Heptachlor epoxide	ND	1	0.003	mg/Kg	02/10/03	SD
Lindane	ND	1	0.003	mg/Kg	02/10/03	SD
Methoxychlor	ND	1	0.025	mg/Kg	02/10/03	SD
Toxaphene	ND	1	0.25	mg/Kg	02/10/03	SD

Surrogates		Units	Control Limits
DCB(Sur2)	122	%	55 - 130
TCMX (Sur1)	85	%	50 - 125

DLR = Detection limit for reporting purposes. ND = Not Detected below indicated detection limit, DF = Dilution Factor

Order #: 406076 **Client:** Dept of Toxic Substances
Matrix: SOLID **Client Sample ID:** CHER-4-0.5
Date Sampled: 01/13/2003
Time Sampled: 12:12
Sampled By:

Analyte	Result	DF	DLR	Units	Date/Analyst	
8081A - Organochlorine Pesticides by GC						
4,4-DDD	ND	1	0.005	mg/Kg	02/10/03	SD
4,4-DDE	0.065	1	0.004	mg/Kg	02/10/03	SD
4,4-DDT	0.087	1	0.005	mg/Kg	02/10/03	SD
Aldrin	ND	1	0.004	mg/Kg	02/10/03	SD
Alpha BHC	ND	1	0.002	mg/Kg	02/10/03	SD
Beta BHC	ND	1	0.003	mg/Kg	02/10/03	SD
Chlordane	0.178	1	0.025	mg/Kg	02/10/03	SD
Delta BHC	ND	1	0.005	mg/Kg	02/10/03	SD
Dieldrin	0.080	1	0.003	mg/Kg	02/10/03	SD
Endosulfan I	ND	1	0.004	mg/Kg	02/10/03	SD
Endosulfan II	ND	1	0.004	mg/Kg	02/10/03	SD
Endosulfan sulfate	ND	1	0.004	mg/Kg	02/10/03	SD
Endrin	ND	1	0.004	mg/Kg	02/10/03	SD
Endrin aldehyde	ND	1	0.004	mg/Kg	02/10/03	SD
Heptachlor	ND	1	0.004	mg/Kg	02/10/03	SD
Heptachlor epoxide	ND	1	0.003	mg/Kg	02/10/03	SD
Lindane	ND	1	0.003	mg/Kg	02/10/03	SD
Methoxychlor	ND	1	0.025	mg/Kg	02/10/03	SD
Toxaphene	ND	1	0.25	mg/Kg	02/10/03	SD

Surrogates		Units	Control Limits
DCB(Sur2)	170	%	55 - 130
TCMX (Sur1)	88	%	50 - 125

DLR = Detection limit for reporting purposes. ND = Not Detected below indicated detection limit. DF = Dilution Factor

Order #: 406077 **Client:** Dept of Toxic Substances

Matrix: SOLID **Client Sample ID:** CHER-4-2

Date Sampled: 01/13/2003

Time Sampled: 13:20

Sampled By:

Analyte	Result	DF	DLR	Units	Date/Analyst	
8081A - Organochlorine Pesticides by GC						
4,4-DDD	0 015	1	0 005	mg/Kg	02/10/03	SD
4,4-DDE	0 012	1	0 004	mg/Kg	02/10/03	SD
4,4-DDT	0 022	1	0 005	mg/Kg	02/10/03	SD
Aldrin	ND	1	0 004	mg/Kg	02/10/03	SD
Alpha BHC	ND	1	0 002	mg/Kg	02/10/03	SD
Beta BHC	ND	1	0 003	mg/Kg	02/10/03	SD
Chlordane	0 214	1	0 025	mg/Kg	02/10/03	SD
Delta BHC	ND	1	0 005	mg/Kg	02/10/03	SD
Dieldrin	0 193	1	0 003	mg/Kg	02/10/03	SD
Endosulfan I	ND	1	0 004	mg/Kg	02/10/03	SD
Endosulfan II	ND	1	0 004	mg/Kg	02/10/03	SD
Endosulfan sulfate	ND	1	0 004	mg/Kg	02/10/03	SD
Endrin	ND	1	0 004	mg/Kg	02/10/03	SD
Endrin aldehyde	ND	1	0 004	mg/Kg	02/10/03	SD
Heptachlor	ND	1	0 004	mg/Kg	02/10/03	SD
Heptachlor epoxide	ND	1	0 003	mg/Kg	02/10/03	SD
Lindane	ND	1	0 003	mg/Kg	02/10/03	SD
Methoxychlor	ND	1	0 025	mg/Kg	02/10/03	SD
Toxaphene	ND	1	0 25	mg/Kg	02/10/03	SD

Surrogates		Units	Control Limits
DCB(Sur2)	124	%	55 - 130
TCMX (Sur1)	98	%	50 - 125

DLR = Detection limit for reporting purposes ND = Not Detected below indicated detection limit, DF = Dilution Factor

Order #: 406078 **Client:** Dept. of Toxic Substances
Matrix: SOLID **Client Sample ID:** CHER-5-0 5
Date Sampled: 01/13/2003
Time Sampled: 13:40
Sampled By:

Analyte	Result	DF	DLR	Units	Date/Analyst	
8081A - Organochlorine Pesticides by GC						
4,4-DDD	0.705	20	0 1	mg/Kg	02/10/03	SD
4,4-DDE	0.745	20	0.08	mg/Kg	02/10/03	SD
4,4-DDT	5.26	20	0.1	mg/Kg	02/10/03	SD
Aldrin	ND	1	0 004	mg/Kg	02/10/03	SD
Alpha BHC	ND	1	0.002	mg/Kg	02/10/03	SD
Beta BHC	ND	1	0 003	mg/Kg	02/10/03	SD
Chlordane	0.340	10	0 25	mg/Kg	02/10/03	SD
Delta BHC	ND	1	0 005	mg/Kg	02/10/03	SD
Dieldrin	0.226	1	0 003	mg/Kg	02/10/03	SD
Endosulfan I	ND	1	0 004	mg/Kg	02/10/03	SD
Endosulfan II	ND	1	0 004	mg/Kg	02/10/03	SD
Endosulfan sulfate	ND	1	0 004	mg/Kg	02/10/03	SD
Endrin	ND	1	0.004	mg/Kg	02/10/03	SD
Endrin aldehyde	ND	1	0 004	mg/Kg	02/10/03	SD
Heptachlor	ND	1	0 004	mg/Kg	02/10/03	SD
Heptachlor epoxide	ND	1	0.003	mg/Kg	02/10/03	SD
Lindane	ND	1	0.003	mg/Kg	02/10/03	SD
Methoxychlor	ND	1	0 025	mg/Kg	02/10/03	SD
Toxaphene	ND	1	0 25	mg/Kg	02/10/03	SD

Surrogates		Units	Control Limits
DCB(Sur2)	133	%	55 - 130
TCMX (Sur1)	97	%	50 - 125

DLR = Detection limit for reporting purposes ND = Not Detected below indicated detection limit. DF = Dilution Factor

Order #: 406079
Matrix: SOLID
Date Sampled: 01/13/2003
Time Sampled: 14:15
Sampled By:

Client: Dept of Toxic Substances
Client Sample ID: CHER-5-2

Analyte	Result	DF	DLR	Units	Date/Analyst	
8081A - Organochlorine Pesticides by GC						
4,4-DDD	0.015	1	0.005	mg/Kg	02/11/03	SD
4,4-DDE	0.144	5	0.02	mg/Kg	02/11/03	SD
4,4-DDT	0.753	5	0.025	mg/Kg	02/11/03	SD
Aldrin	ND	1	0.004	mg/Kg	02/11/03	SD
Alpha BHC	ND	1	0.002	mg/Kg	02/11/03	SD
Beta BHC	ND	1	0.003	mg/Kg	02/11/03	SD
Chlordane	0.031	1	0.025	mg/Kg	02/11/03	SD
Delta BHC	ND	1	0.005	mg/Kg	02/11/03	SD
Dieldrin	0.017	1	0.003	mg/Kg	02/11/03	SD
Endosulfan I	ND	1	0.004	mg/Kg	02/11/03	SD
Endosulfan II	ND	1	0.004	mg/Kg	02/11/03	SD
Endosulfan sulfate	ND	1	0.004	mg/Kg	02/11/03	SD
Endrin	ND	1	0.004	mg/Kg	02/11/03	SD
Endrin aldehyde	ND	1	0.004	mg/Kg	02/11/03	SD
Heptachlor	ND	1	0.004	mg/Kg	02/11/03	SD
Heptachlor epoxide	ND	1	0.003	mg/Kg	02/11/03	SD
Lindane	ND	1	0.003	mg/Kg	02/11/03	SD
Methoxychlor	ND	1	0.025	mg/Kg	02/11/03	SD
Toxaphene	ND	1	0.25	mg/Kg	02/11/03	SD

Surrogates		Units	Control Limits
DCB(Sur2)	113	%	55 - 130
TCMX (Sur1)	77	%	50 - 125

DLR = Detection limit for reporting purposes. ND = Not Detected below indicated detection limit. DF = Dilution Factor

Order #: 406080
Matrix: SOLID
Date Sampled: 01/13/2003
Time Sampled: 13:40
Sampled By:

Client: Dept. of Toxic Substances
Client Sample ID: CHER-6-0.5

Analyte	Result	DF	DLR	Units	Date/Analyst	
8081A - Organochlorine Pesticides by GC						
4,4-DDD	0.021	1	0.005	mg/Kg	02/11/03	SD
4,4-DDE	0.055	1	0.004	mg/Kg	02/11/03	SD
4,4-DDT	0.124	1	0.005	mg/Kg	02/11/03	SD
Aldrin	ND	1	0.004	mg/Kg	02/11/03	SD
Alpha BHC	ND	1	0.002	mg/Kg	02/11/03	SD
Beta BHC	ND	1	0.003	mg/Kg	02/11/03	SD
Chlordane	0.281	1	0.025	mg/Kg	02/11/03	SD
Delta BHC	ND	1	0.005	mg/Kg	02/11/03	SD
Dieldrin	0.130	1	0.003	mg/Kg	02/11/03	SD
Endosulfan I	ND	1	0.004	mg/Kg	02/11/03	SD
Endosulfan II	ND	1	0.004	mg/Kg	02/11/03	SD
Endosulfan sulfate	ND	1	0.004	mg/Kg	02/11/03	SD
Endrin	ND	1	0.004	mg/Kg	02/11/03	SD
Endrin aldehyde	ND	1	0.004	mg/Kg	02/11/03	SD
Heptachlor	ND	1	0.004	mg/Kg	02/11/03	SD
Heptachlor epoxide	ND	1	0.003	mg/Kg	02/11/03	SD
Lindane	ND	1	0.003	mg/Kg	02/11/03	SD
Methoxychlor	ND	1	0.025	mg/Kg	02/11/03	SD
Toxaphene	ND	1	0.25	mg/Kg	02/11/03	SD

Surrogates		Units	Control Limits
DCB(Sur2)	113	%	55 - 130
TCMX (Sur1)	82	%	50 - 125

DLR = Detection limit for reporting purposes. ND = Not Detected below indicated detection limit. DF = Dilution Factor

Order #: 406081 **Client:** Dept of Toxic Substances
Matrix: SOLID **Client Sample ID:** CHER-6-2
Date Sampled: 01/13/2003
Time Sampled: 14:00
Sampled By:

Analyte	Result	DF	DLR	Units	Date/Analyst	
8081A - Organochlorine Pesticides by GC						
4,4-DDD	ND	1	0.005	mg/Kg	02/11/03	SD
4,4-DDE	0.014	1	0.004	mg/Kg	02/11/03	SD
4,4-DDT	0.026	1	0.005	mg/Kg	02/11/03	SD
Aldrin	ND	1	0.004	mg/Kg	02/11/03	SD
Alpha BHC	ND	1	0.002	mg/Kg	02/11/03	SD
Beta BHC	ND	1	0.003	mg/Kg	02/11/03	SD
Chlordane	0.013	1	0.025	mg/Kg	02/11/03	SD
Delta BHC	ND	1	0.005	mg/Kg	02/11/03	SD
Dieldrin	0.007	1	0.003	mg/Kg	02/11/03	SD
Endosulfan I	ND	1	0.004	mg/Kg	02/11/03	SD
Endosulfan II	ND	1	0.004	mg/Kg	02/11/03	SD
Endosulfan sulfate	ND	1	0.004	mg/Kg	02/11/03	SD
Endrin	ND	1	0.004	mg/Kg	02/11/03	SD
Endrin aldehyde	ND	1	0.004	mg/Kg	02/11/03	SD
Heptachlor	ND	1	0.004	mg/Kg	02/11/03	SD
Heptachlor epoxide	ND	1	0.003	mg/Kg	02/11/03	SD
Lindane	ND	1	0.003	mg/Kg	02/11/03	SD
Methoxychlor	ND	1	0.025	mg/Kg	02/11/03	SD
Toxaphene	ND	1	0.25	mg/Kg	02/11/03	SD
Surrogates				**Units**	**Control Limits**	
DCB(Sur2)	117			%	55 - 130	
TCMX (Sur1)	90			%	50 - 125	

DLR = Detection limit for reporting purposes. ND = Not Detected below indicated detection limit. DF = Dilution Factor

Order #: 406082 **Client:** Dept. of Toxic Substances
Matrix: SOLID **Client Sample ID:** CHER-8-5
Date Sampled: 01/13/2003
Time Sampled: 12:50
Sampled By:

Analyte	Result	DF	DLR	Units	Date/Analyst	
8081A - Organochlorine Pesticides by GC						
4,4-DDD	ND	1	0.005	mg/Kg	02/11/03	SD
4,4-DDE	0.055	1	0.004	mg/Kg	02/11/03	SD
4,4-DDT	0.151	1	0.005	mg/Kg	02/11/03	SD
Aldrin	ND	1	0.004	mg/Kg	02/11/03	SD
Alpha BHC	ND	1	0.002	mg/Kg	02/11/03	SD
Beta BHC	ND	1	0.003	mg/Kg	02/11/03	SD
Chlordane	0.269	1	0.025	mg/Kg	02/11/03	SD
Delta BHC	ND	1	0.005	mg/Kg	02/11/03	SD
Dieldrin	0.075	1	0.003	mg/Kg	02/11/03	SD
Endosulfan I	ND	1	0.004	mg/Kg	02/11/03	SD
Endosulfan II	ND	1	0.004	mg/Kg	02/11/03	SD
Endosulfan sulfate	ND	1	0.004	mg/Kg	02/11/03	SD
Endrin	ND	1	0.004	mg/Kg	02/11/03	SD
Endrin aldehyde	ND	1	0.004	mg/Kg	02/11/03	SD
Heptachlor	ND	1	0.004	mg/Kg	02/11/03	SD
Heptachlor epoxide	ND	1	0.003	mg/Kg	02/11/03	SD
Lindane	ND	1	0.003	mg/Kg	02/11/03	SD
Methoxychlor	ND	1	0.025	mg/Kg	02/11/03	SD
Toxaphene	ND	1	0.25	mg/Kg	02/11/03	SD
Surrogates				**Units**	**Control Limits**	
DCB(Sur2)	123			%	55 - 130	
TCMX (Sur1)	92			%	50 - 125	

DLR = Detection limit for reporting purposes. ND = Not Detected below indicated detection limit DF = Dilution Factor

Order #: 406083 Client: Dept. of Toxic Substances
Matrix: SOLID Client Sample ID: CHER-8-2
Date Sampled: 01/13/2003
Time Sampled: 14:05
Sampled By:

Analyte	Result	DF	DLR	Units	Date/Analyst	
8081A - Organochlorine Pesticides by GC						
4,4-DDD	ND	1	0.005	mg/Kg	02/11/03	SD
4,4-DDE	ND	1	0.004	mg/Kg	02/11/03	SD
4,4-DDT	ND	1	0.005	mg/Kg	02/11/03	SD
Aldrin	ND	1	0.004	mg/Kg	02/11/03	SD
Alpha BHC	ND	1	0.002	mg/Kg	02/11/03	SD
Beta BHC	ND	1	0.003	mg/Kg	02/11/03	SD
Chlordane	0.017	1	0.025	mg/Kg	02/11/03	SD
Delta BHC	ND	1	0.005	mg/Kg	02/11/03	SD
Dieldrin	ND	1	0.003	mg/Kg	02/11/03	SD
Endosulfan I	ND	1	0.004	mg/Kg	02/11/03	SD
Endosulfan II	ND	1	0.004	mg/Kg	02/11/03	SD
Endosulfan sulfate	ND	1	0.004	mg/Kg	02/11/03	SD
Endrin	ND	1	0.004	mg/Kg	02/11/03	SD
Endrin aldehyde	ND	1	0.004	mg/Kg	02/11/03	SD
Heptachlor	ND	1	0.004	mg/Kg	02/11/03	SD
Heptachlor epoxide	ND	1	0.003	mg/Kg	02/11/03	SD
Lindane	ND	1	0.003	mg/Kg	02/11/03	SD
Methoxychlor	ND	1	0.025	mg/Kg	02/11/03	SD
Toxaphene	ND	1	0.25	mg/Kg	02/11/03	SD

Surrogates		Units	Control Limits
DCB(Sur2)	101	%	55 - 130
TCMX (Sur1)	80	%	50 - 125

DLR = Detection limit for reporting purposes. ND = Not Detected below indicated detection limit. DF = Dilution Factor

Order #: 406084
Matrix: SOLID
Date Sampled: 01/13/2003
Time Sampled: 15:50
Sampled By:

Client: Dept. of Toxic Substances
Client Sample ID: CHER-7-5

Analyte	Result	DF	DLR	Units	Date/Analyst	
8081A - Organochlorine Pesticides by GC						
4,4-DDD	0.009	1	0.005	mg/Kg	02/11/03	SD
4,4-DDE	0.008	1	0.004	mg/Kg	02/11/03	SD
4,4-DDT	0.033	1	0.005	mg/Kg	02/11/03	SD
Aldrin	0.005	1	0.004	mg/Kg	02/11/03	SD
Alpha BHC	ND	1	0.002	mg/Kg	02/11/03	SD
Beta BHC	ND	1	0.003	mg/Kg	02/11/03	SD
Chlordane	0.177	1	0.025	mg/Kg	02/11/03	SD
Delta BHC	ND	1	0.005	mg/Kg	02/11/03	SD
Dieldrin	0.034	1	0.003	mg/Kg	02/11/03	SD
Endosulfan I	ND	1	0.004	mg/Kg	02/11/03	SD
Endosulfan II	ND	1	0.004	mg/Kg	02/11/03	SD
Endosulfan sulfate	ND	1	0.004	mg/Kg	02/11/03	SD
Endrin	ND	1	0.004	mg/Kg	02/11/03	SD
Endrin aldehyde	ND	1	0.004	mg/Kg	02/11/03	SD
Heptachlor	ND	1	0.004	mg/Kg	02/11/03	SD
Heptachlor epoxide	ND	1	0.003	mg/Kg	02/11/03	SD
Lindane	ND	1	0.003	mg/Kg	02/11/03	SD
Methoxychlor	ND	1	0.025	mg/Kg	02/11/03	SD
Toxaphene	ND	1	0.25	mg/Kg	02/11/03	SD

Surrogates		Units	Control Limits
DCB(Sur2)	94	%	55 - 130
TCMX (Sur1)	76	%	50 - 125

DLR = Detection limit for reporting purposes ND = Not Detected below indicated detection limit DF = Dilution Factor

Order #: 406085
Matrix: SOLID
Date Sampled: 01/13/2003
Time Sampled: 15:52
Sampled By:

Client: Dept. of Toxic Substances
Client Sample ID: CHER-7-2

Analyte	Result	DF	DLR	Units	Date/Analyst	
8081A - Organochlorine Pesticides by GC						
4,4-DDD	ND	1	0.005	mg/Kg	02/11/03	SD
4,4-DDE	ND	1	0.004	mg/Kg	02/11/03	SD
4,4-DDT	ND	1	0.005	mg/Kg	02/11/03	SD
Aldrin	ND	1	0.004	mg/Kg	02/11/03	SD
Alpha BHC	ND	1	0.002	mg/Kg	02/11/03	SD
Beta BHC	ND	1	0.003	mg/Kg	02/11/03	SD
Chlordane	ND	1	0.025	mg/Kg	02/11/03	SD
Delta BHC	ND	1	0.005	mg/Kg	02/11/03	SD
Dieldrin	ND	1	0.003	mg/Kg	02/11/03	SD
Endosulfan I	ND	1	0.004	mg/Kg	02/11/03	SD
Endosulfan II	ND	1	0.004	mg/Kg	02/11/03	SD
Endosulfan sulfate	ND	1	0.004	mg/Kg	02/11/03	SD
Endrin	ND	1	0.004	mg/Kg	02/11/03	SD
Endrin aldehyde	ND	1	0.004	mg/Kg	02/11/03	SD
Heptachlor	ND	1	0.004	mg/Kg	02/11/03	SD
Heptachlor epoxide	ND	1	0.003	mg/Kg	02/11/03	SD
Lindane	ND	1	0.003	mg/Kg	02/11/03	SD
Methoxychlor	ND	1	0.025	mg/Kg	02/11/03	SD
Toxaphene	ND	1	0.25	mg/Kg	02/11/03	SD

Surrogates		Units	Control Limits
DCB(Sur2)	86	%	55 - 130
TCMX (Sur1)	59	%	50 - 125

DLR = Detection limit for reporting purposes ND = Not Detected below indicated detection limit DF = Dilution Factor

Order #: 406086
Matrix: SOLID
Date Sampled: 01/13/2003
Time Sampled: 15:55
Sampled By:

Client: Dept of Toxic Substances
Client Sample ID: CHER-9-0 5

Analyte	Result	DF	DLR	Units	Date/Analyst	
8081A - Organochlorine Pesticides by GC						
4,4-DDD	ND	1	0 005	mg/Kg	02/11/03	SD
4,4-DDE	0.013	1	0 004	mg/Kg	02/11/03	SD
4,4-DDT	0 012	1	0.005	mg/Kg	02/11/03	SD
Aldrin	ND	1	0 004	mg/Kg	02/11/03	SD
Alpha BHC	ND	1	0 002	mg/Kg	02/11/03	SD
Beta BHC	ND	1	0 003	mg/Kg	02/11/03	SD
Chlordane	0 056	1	0 025	mg/Kg	02/11/03	SD
Delta BHC	ND	1	0 005	mg/Kg	02/11/03	SD
Dieldrin	0 032	1	0.003	mg/Kg	02/11/03	SD
Endosulfan I	ND	1	0 004	mg/Kg	02/11/03	SD
Endosulfan II	ND	1	0.004	mg/Kg	02/11/03	SD
Endosulfan sulfate	ND	1	0 004	mg/Kg	02/11/03	SD
Endrin	ND	1	0.004	mg/Kg	02/11/03	SD
Endrin aldehyde	ND	1	0.004	mg/Kg	02/11/03	SD
Heptachlor	ND	1	0 004	mg/Kg	02/11/03	SD
Heptachlor epoxide	ND	1	0 003	mg/Kg	02/11/03	SD
Lindane	ND	1	0 003	mg/Kg	02/11/03	SD
Methoxychlor	ND	1	0 025	mg/Kg	02/11/03	SD
Toxaphene	ND	1	0 25	mg/Kg	02/11/03	SD

Surrogates		Units	Control Limits
DCB(Sur2)	104	%	55 - 130
TCMX (Sur1)	74	%	50 - 125

DLR = Detection limit for reporting purposes. ND = Not Detected below indicated detection limit. DF = Dilution Factor

Order #: 406087
Matrix: SOLID
Date Sampled: 01/13/2003
Time Sampled: 15:56
Sampled By:

Client: Dept. of Toxic Substances
Client Sample ID: CHER-10-0.5

Analyte	Result	DF	DLR	Units	Date/Analyst	
8081A - Organochlorine Pesticides by GC						
4,4-DDD	0.005	1	0.005	mg/Kg	02/11/03	SD
4,4-DDE	0.014	1	0.004	mg/Kg	02/11/03	SD
4,4-DDT	0.029	1	0.005	mg/Kg	02/11/03	SD
Aldrin	ND	1	0.004	mg/Kg	02/11/03	SD
Alpha BHC	ND	1	0.002	mg/Kg	02/11/03	SD
Beta BHC	ND	1	0.003	mg/Kg	02/11/03	SD
Chlordane	0.172	1	0.025	mg/Kg	02/11/03	SD
Delta BHC	ND	1	0.005	mg/Kg	02/11/03	SD
Dieldrin	0.028	1	0.003	mg/Kg	02/11/03	SD
Endosulfan I	ND	1	0.004	mg/Kg	02/11/03	SD
Endosulfan II	ND	1	0.004	mg/Kg	02/11/03	SD
Endosulfan sulfate	ND	1	0.004	mg/Kg	02/11/03	SD
Endrin	ND	1	0.004	mg/Kg	02/11/03	SD
Endrin aldehyde	ND	1	0.004	mg/Kg	02/11/03	SD
Heptachlor	ND	1	0.004	mg/Kg	02/11/03	SD
Heptachlor epoxide	ND	1	0.003	mg/Kg	02/11/03	SD
Lindane	ND	1	0.003	mg/Kg	02/11/03	SD
Methoxychlor	ND	1	0.025	mg/Kg	02/11/03	SD
Toxaphene	ND	1	0.25	mg/Kg	02/11/03	SD

Surrogates		Units	Control Limits
DCB(Sur2)	103	%	55 - 130
TCMX (Sur1)	88	%	50 - 125

DLR = Detection limit for reporting purposes. ND = Not Detected below indicated detection limit. DF = Dilution Factor

Order #: 406088
Matrix: SOLID
Date Sampled: 01/13/2003
Time Sampled: 15:57
Sampled By:

Client: Dept. of Toxic Substances
Client Sample ID: CHER-9-2

Analyte	Result	DF	DLR	Units	Date/Analyst	
8081A - Organochlorine Pesticides by GC						
4,4-DDD	ND	1	0.005	mg/Kg	02/11/03	SD
4,4-DDE	ND	1	0.004	mg/Kg	02/11/03	SD
4,4-DDT	ND	1	0.005	mg/Kg	02/11/03	SD
Aldrin	ND	1	0.004	mg/Kg	02/11/03	SD
Alpha BHC	ND	1	0.002	mg/Kg	02/11/03	SD
Beta BHC	ND	1	0.003	mg/Kg	02/11/03	SD
Chlordane	ND	1	0.025	mg/Kg	02/11/03	SD
Delta BHC	ND	1	0.005	mg/Kg	02/11/03	SD
Dieldrin	ND	1	0.003	mg/Kg	02/11/03	SD
Endosulfan I	ND	1	0.004	mg/Kg	02/11/03	SD
Endosulfan II	ND	1	0.004	mg/Kg	02/11/03	SD
Endosulfan sulfate	ND	1	0.004	mg/Kg	02/11/03	SD
Endrin	ND	1	0.004	mg/Kg	02/11/03	SD
Endrin aldehyde	ND	1	0.004	mg/Kg	02/11/03	SD
Heptachlor	ND	1	0.004	mg/Kg	02/11/03	SD
Heptachlor epoxide	ND	1	0.003	mg/Kg	02/11/03	SD
Lindane	ND	1	0.003	mg/Kg	02/11/03	SD
Methoxychlor	ND	1	0.025	mg/Kg	02/11/03	SD
Toxaphene	ND	1	0.25	mg/Kg	02/11/03	SD

Surrogates		Units	Control Limits
DCB(Sur2)	96	%	55 - 130
TCMX (Sur1)	84	%	50 - 125

DLR = Detection limit for reporting purposes ND = Not Detected below indicated detection limit DF = Dilution Factor

Order #: 406089
Matrix: SOLID
Date Sampled: 01/13/2003
Time Sampled: 15:58
Sampled By:

Client: Dept. of Toxic Substances
Client Sample ID: CHER-10-2

Analyte	Result	DF	DLR	Units	Date/Analyst	
8081A - Organochlorine Pesticides by GC						
4,4-DDD	ND	1	0.005	mg/Kg	02/11/03	SD
4,4-DDE	ND	1	0.004	mg/Kg	02/11/03	SD
4,4-DDT	ND	1	0.005	mg/Kg	02/11/03	SD
Aldrin	ND	1	0.004	mg/Kg	02/11/03	SD
Alpha BHC	ND	1	0.002	mg/Kg	02/11/03	SD
Beta BHC	ND	1	0.003	mg/Kg	02/11/03	SD
Chlordane	ND	1	0.025	mg/Kg	02/11/03	SD
Delta BHC	ND	1	0.005	mg/Kg	02/11/03	SD
Dieldrin	ND	1	0.003	mg/Kg	02/11/03	SD
Endosulfan I	ND	1	0.004	mg/Kg	02/11/03	SD
Endosulfan II	ND	1	0.004	mg/Kg	02/11/03	SD
Endosulfan sulfate	ND	1	0.004	mg/Kg	02/11/03	SD
Endrin	ND	1	0.004	mg/Kg	02/11/03	SD
Endrin aldehyde	ND	1	0.004	mg/Kg	02/11/03	SD
Heptachlor	ND	1	0.004	mg/Kg	02/11/03	SD
Heptachlor epoxide	ND	1	0.003	mg/Kg	02/11/03	SD
Lindane	ND	1	0.003	mg/Kg	02/11/03	SD
Methoxychlor	ND	1	0.025	mg/Kg	02/11/03	SD
Toxaphene	ND	1	0.25	mg/Kg	02/11/03	SD
Surrogates				Units	Control Limits	
DCB(Sur2)	93			%	55 - 130	
TCMX (Sur1)	82			%	50 - 125	

DLR = Detection limit for reporting purposes. ND = Not Detected below indicated detection limit. DF = Dilution Factor

Order #: 406090
Matrix: SOLID
Date Sampled: 01/13/2003
Time Sampled: 16:00
Sampled By:

Client: Dept. of Toxic Substances
Client Sample ID: CHER-11-0 5

Analyte	Result	DF	DLR	Units	Date/Analyst	
8081A - Organochlorine Pesticides by GC						
4,4-DDD	ND	1	0.005	mg/Kg	02/11/03	SD
4,4-DDE	0.009	1	0.004	mg/Kg	02/11/03	SD
4,4-DDT	0.021	1	0.005	mg/Kg	02/11/03	SD
Aldrin	ND	1	0.004	mg/Kg	02/11/03	SD
Alpha BHC	ND	1	0.002	mg/Kg	02/11/03	SD
Beta BHC	ND	1	0.003	mg/Kg	02/11/03	SD
Chlordane	0.462	1	0.025	mg/Kg	02/11/03	SD
Delta BHC	ND	1	0.005	mg/Kg	02/11/03	SD
Dieldrin	0.008	1	0.003	mg/Kg	02/11/03	SD
Endosulfan I	ND	1	0.004	mg/Kg	02/11/03	SD
Endosulfan II	ND	1	0.004	mg/Kg	02/11/03	SD
Endosulfan sulfate	ND	1	0.004	mg/Kg	02/11/03	SD
Endrin	ND	1	0.004	mg/Kg	02/11/03	SD
Endrin aldehyde	ND	1	0.004	mg/Kg	02/11/03	SD
Heptachlor	ND	1	0.004	mg/Kg	02/11/03	SD
Heptachlor epoxide	ND	1	0.003	mg/Kg	02/11/03	SD
Lindane	ND	1	0.003	mg/Kg	02/11/03	SD
Methoxychlor	ND	1	0.025	mg/Kg	02/11/03	SD
Toxaphene	ND	1	0.25	mg/Kg	02/11/03	SD

Surrogates		Units	Control Limits
DCB(Sur2)	98	%	55 - 130
TCMX (Sur1)	87	%	50 - 125

DLR = Detection limit for reporting purposes. ND = Not Detected below indicated detection limit. DF = Dilution Factor

Order #: 406091
Matrix: SOLID
Date Sampled: 01/13/2003
Time Sampled: 16:01
Sampled By:

Client: Dept. of Toxic Substances
Client Sample ID: CHER-11-0 5D

Analyte	Result	DF	DLR	Units	Date/Analyst	
8081A - Organochlorine Pesticides by GC						
4,4-DDD	0 018	1	0 005	mg/Kg	02/11/03	SD
4,4-DDE	0 009	1	0.004	mg/Kg	02/11/03	SD
4,4-DDT	0 024	1	0 005	mg/Kg	02/11/03	SD
Aldrin	ND	1	0.004	mg/Kg	02/11/03	SD
Alpha BHC	ND	1	0 002	mg/Kg	02/11/03	SD
Beta BHC	ND	1	0 003	mg/Kg	02/11/03	SD
Chlordane	0 349	1	0 025	mg/Kg	02/11/03	SD
Delta BHC	ND	1	0 005	mg/Kg	02/11/03	SD
Dieldrin	0.015	1	0 003	mg/Kg	02/11/03	SD
Endosulfan I	ND	1	0.004	mg/Kg	02/11/03	SD
Endosulfan II	ND	1	0 004	mg/Kg	02/11/03	SD
Endosulfan sulfate	ND	1	0 004	mg/Kg	02/11/03	SD
Endrin	ND	1	0 004	mg/Kg	02/11/03	SD
Endrin aldehyde	ND	1	0 004	mg/Kg	02/11/03	SD
Heptachlor	ND	1	0.004	mg/Kg	02/11/03	SD
Heptachlor epoxide	ND	1	0 003	mg/Kg	02/11/03	SD
Lindane	ND	1	0.003	mg/Kg	02/11/03	SD
Methoxychlor	ND	1	0 025	mg/Kg	02/11/03	SD
Toxaphene	ND	1	0 25	mg/Kg	02/11/03	SD

Surrogates		Units	Control Limits
DCB(Sur2)	98	%	55 - 130
TCMX (Sur1)	82	%	50 - 125

DLR = Detection limit for reporting purposes. ND = Not Detected below indicated detection limit. DF = Dilution Factor

Order #: 406092
Matrix: SOLID
Date Sampled: 01/13/2003
Time Sampled: 15:59
Sampled By:

Client: Dept of Toxic Substances
Client Sample ID: CHER-12-0 5

Analyte	Result	DF	DLR	Units	Date/Analyst	
8081A - Organochlorine Pesticides by GC						
4,4-DDD	ND	1	0.005	mg/Kg	02/11/03	SD
4,4-DDE	ND	1	0.004	mg/Kg	02/11/03	SD
4,4-DDT	ND	1	0.005	mg/Kg	02/11/03	SD
Aldrin	ND	1	0 004	mg/Kg	02/11/03	SD
Alpha BHC	ND	1	0 002	mg/Kg	02/11/03	SD
Beta BHC	ND	1	0 003	mg/Kg	02/11/03	SD
Chlordane	ND	1	0 025	mg/Kg	02/11/03	SD
Delta BHC	ND	1	0.005	mg/Kg	02/11/03	SD
Dieldrin	0 052	1	0 003	mg/Kg	02/11/03	SD
Endosulfan I	ND	1	0.004	mg/Kg	02/11/03	SD
Endosulfan II	ND	1	0 004	mg/Kg	02/11/03	SD
Endosulfan sulfate	ND	1	0 004	mg/Kg	02/11/03	SD
Endrin	ND	1	0.004	mg/Kg	02/11/03	SD
Endrin aldehyde	ND	1	0 004	mg/Kg	02/11/03	SD
Heptachlor	ND	1	0 004	mg/Kg	02/11/03	SD
Heptachlor epoxide	ND	1	0 003	mg/Kg	02/11 03	SD
Lindane	ND	1	0 003	mg/Kg	02/11/03	SD
Methoxychlor	ND	1	0 025	mg/Kg	02/11/03	SD
Toxaphene	ND	1	0 25	mg/Kg	02/11/03	SD

Surrogates		Units	Control Limits
DCB(Sur2)	100	%	55 - 130
TCMX (Sur1)	71	%	50 - 125

DLR = Detection limit for reporting purposes ND = Not Detected below indicated detection limit DF = Dilution Factor

Order #: 406093
Matrix: SOLID
Date Sampled: 01/13/2003
Time Sampled: 16:00
Sampled By:

Client: Dept. of Toxic Substances
Client Sample ID: CHER-12-2

Analyte	Result	DF	DLR	Units	Date/Analyst	
8081A - Organochlorine Pesticides by GC						
4,4-DDD	ND	1	0.005	mg/Kg	02/11/03	SD
4,4-DDE	ND	1	0.004	mg/Kg	02/11/03	SD
4,4-DDT	ND	1	0.005	mg/Kg	02/11/03	SD
Aldrin	ND	1	0.004	mg/Kg	02/11/03	SD
Alpha BHC	ND	1	0.002	mg/Kg	02/11/03	SD
Beta BHC	ND	1	0.003	mg/Kg	02/11/03	SD
Chlordane	ND	1	0.025	mg/Kg	02/11/03	SD
Delta BHC	ND	1	0.005	mg/Kg	02/11/03	SD
Dieldrin	0.014	1	0.003	mg/Kg	02/11/03	SD
Endosulfan I	ND	1	0.004	mg/Kg	02/11/03	SD
Endosulfan II	ND	1	0.004	mg/Kg	02/11/03	SD
Endosulfan sulfate	ND	1	0.004	mg/Kg	02/11/03	SD
Endrin	ND	1	0.004	mg/Kg	02/11/03	SD
Endrin aldehyde	ND	1	0.004	mg/Kg	02/11/03	SD
Heptachlor	ND	1	0.004	mg/Kg	02/11/03	SD
Heptachlor epoxide	ND	1	0.003	mg/Kg	02/11/03	SD
Lindane	ND	1	0.003	mg/Kg	02/11/03	SD
Methoxychlor	ND	1	0.025	mg/Kg	02/11/03	SD
Toxaphene	ND	1	0.25	mg/Kg	02/11/03	SD
Surrogates				Units	Control Limits	
DCB(Sur2)	98			%	55 - 130	
TCMX (Sur1)	80			%	50 - 125	

DLR = Detection limit for reporting purposes. ND = Not Detected below indicated detection limit. DF = Dilution Factor

Order #: 406094 Client: Dept. of Toxic Substances

Matrix: SOLID Client Sample ID: CHER-11-2

Date Sampled: 01/13/2003

Time Sampled: 16:03

Sampled By:

Analyte	Result	DF	DLR	Units	Date/Analyst	
8081A - Organochlorine Pesticides by GC						
4,4-DDD	ND	1	0.005	mg/Kg	02/11/03	SD
4,4-DDE	ND	1	0.004	mg/Kg	02/11/03	SD
4,4-DDT	ND	1	0.005	mg/Kg	02/11/03	SD
Aldrin	ND	1	0.004	mg/Kg	02/11/03	SD
Alpha BHC	ND	1	0.002	mg/Kg	02/11/03	SD
Beta BHC	ND	1	0.003	mg/Kg	02/11/03	SD
Chlordane	ND	1	0.025	mg/Kg	02/11/03	SD
Delta BHC	ND	1	0.005	mg/Kg	02/11/03	SD
Dieldrin	ND	1	0.003	mg/Kg	02/11/03	SD
Endosulfan I	ND	1	0.004	mg/Kg	02/11/03	SD
Endosulfan II	ND	1	0.004	mg/Kg	02/11/03	SD
Endosulfan sulfate	ND	1	0.004	mg/Kg	02/11/03	SD
Endrin	ND	1	0.004	mg/Kg	02/11/03	SD
Endrin aldehyde	ND	1	0.004	mg/Kg	02/11/03	SD
Heptachlor	ND	1	0.004	mg/Kg	02/11/03	SD
Heptachlor epoxide	ND	1	0.003	mg/Kg	02/11/03	SD
Lindane	ND	1	0.003	mg/Kg	02/11/03	SD
Methoxychlor	ND	1	0.025	mg/Kg	02/11/03	SD
Toxaphene	ND	1	0.25	mg/Kg	02/11/03	SD

Surrogates		Units	Control Limits
DCB(Sur2)	90	%	55 - 130
TCMX (Sur1)	67	%	50 - 125

DLR = Detection limit for reporting purposes. ND = Not Detected below indicated detection limit. DF = Dilution Factor

Order #: 406095
Matrix: SOLID
Date Sampled: 01/13/2003
Time Sampled: 16:05
Sampled By:

Client: Dept. of Toxic Substances
Client Sample ID: CHER-13-0.5

Analyte	Result	DF	DLR	Units	Date/Analyst	
8081A - Organochlorine Pesticides by GC						
4,4-DDD	0.021	10	0.05	mg/Kg	02/11/03	SD
4,4-DDE	0.402	10	0.04	mg/Kg	02/11/03	SD
4,4-DDT	0.504	10	0.05	mg/Kg	02/11/03	SD
Aldrin	ND	1	0.004	mg/Kg	02/11/03	SD
Alpha BHC	ND	1	0.002	mg/Kg	02/11/03	SD
Beta BHC	ND	1	0.003	mg/Kg	02/11/03	SD
Chlordane	0.258	1	0.025	mg/Kg	02/11/03	SD
Delta BHC	ND	1	0.005	mg/Kg	02/11/03	SD
Dieldrin	ND	1	0.003	mg/Kg	02/11/03	SD
Endosulfan I	ND	1	0.004	mg/Kg	02/11/03	SD
Endosulfan II	ND	1	0.004	mg/Kg	02/11/03	SD
Endosulfan sulfate	ND	1	0.004	mg/Kg	02/11/03	SD
Endrin	ND	1	0.004	mg/Kg	02/11/03	SD
Endrin aldehyde	ND	1	0.004	mg/Kg	02/11/03	SD
Heptachlor	ND	1	0.004	mg/Kg	02/11/03	SD
Heptachlor epoxide	ND	1	0.003	mg/Kg	02/11/03	SD
Lindane	ND	1	0.003	mg/Kg	02/11/03	SD
Methoxychlor	ND	1	0.025	mg/Kg	02/11/03	SD
Toxaphene	ND	1	0.25	mg/Kg	02/11/03	SD

Surrogates		Units	Control Limits
DCB(Sur2)	98	%	55 - 130
TCMX (Sur1)	74	%	50 - 125

DLR = Detection limit for reporting purposes. ND = Not Detected below indicated detection limit. DF = Dilution Factor

Order #: 406096 Client: Dept of Toxic Substances
Matrix: SOLID Client Sample ID: CHER-14-0 5
Date Sampled: 01/13/2003
Time Sampled: 16:05
Sampled By:

Analyte	Result	DF	DLR	Units	Date/Analyst	
8081A - Organochlorine Pesticides by GC						
4,4-DDD	ND	1	0 005	mg/Kg	02/11/03	SD
4,4-DDE	0 007	1	0 004	mg/Kg	02/11/03	SD
4,4-DDT	0 018	1	0 005	mg/Kg	02/11/03	SD
Aldrin	ND	1	0 004	mg/Kg	02/11/03	SD
Alpha BHC	ND	1	0 002	mg/Kg	02/11/03	SD
Beta BHC	ND	1	0 003	mg/Kg	02/11/03	SD
Chlordane	0 063	1	0 025	mg/Kg	02/11/03	SD
Delta BHC	ND	1	0 005	mg/Kg	02/11/03	SD
Dieldrin	0 004	1	0 003	mg/Kg	02/11/03	SD
Endosulfan I	ND	1	0 004	mg/Kg	02/11/03	SD
Endosulfan II	ND	1	0 004	mg/Kg	02/11/03	SD
Endosulfan sulfate	ND	1	0 004	mg/Kg	02/11/03	SD
Endrin	ND	1	0 004	mg/Kg	02/11/03	SD
Endrin aldehyde	ND	1	0 004	mg/Kg	02/11/03	SD
Heptachlor	ND	1	0 004	mg/Kg	02/11/03	SD
Heptachlor epoxide	ND	1	0 003	mg/Kg	02/11/03	SD
Lindane	ND	1	0 003	mg/Kg	02/11/03	SD
Methoxychlor	ND	1	0 025	mg/Kg	02/11/03	SD
Toxaphene	ND	1	0 25	mg/Kg	02/11/03	SD

Surrogates		Units	Control Limits
DCB(Sur2)	107	%	55 - 130
TCMX (Sur1)	68	%	50 - 125

DLR = Detection limit for reporting purposes. ND = Not Detected below indicated detection limit. DF = Dilution Factor

Order #: 406097
Matrix: SOLID
Date Sampled: 01/13/2003
Time Sampled: 16:15
Sampled By:

Client: Dept. of Toxic Substances
Client Sample ID: CHER-15-0 5

8081A - Organochlorine Pesticides by GC

Analyte	Result	DF	DLR	Units	Date/Analyst	
4,4-DDD	ND	1	0 005	mg/Kg	02/11/03	SD
4,4-DDE	0.028	1	0 004	mg/Kg	02/11/03	SD
4,4-DDT	0 031	1	0 005	mg/Kg	02/11/03	SD
Aldrin	ND	1	0.004	mg/Kg	02/11/03	SD
Alpha BHC	ND	1	0 002	mg/Kg	02/11/03	SD
Beta BHC	ND	1	0 003	mg/Kg	02/11/03	SD
Chlordane	0 370	1	0 025	mg/Kg	02/11/03	SD
Delta BHC	ND	1	0 005	mg/Kg	02/11/03	SD
Dieldrin	ND	1	0 003	mg/Kg	02/11/03	SD
Endosulfan I	ND	1	0 004	mg/Kg	02/11/03	SD
Endosulfan II	ND	1	0 004	mg/Kg	02/11/03	SD
Endosulfan sulfate	ND	1	0 004	mg/Kg	02/11/03	SD
Endrin	ND	1	0 004	mg/Kg	02/11/03	SD
Endrin aldehyde	ND	1	0 004	mg/Kg	02/11/03	SD
Heptachlor	ND	1	0 004	mg/Kg	02/11/03	SD
Heptachlor epoxide	ND	1	0 003	mg/Kg	02/11/03	SD
Lindane	ND	1	0 003	mg/Kg	02/11/03	SD
Methoxychlor	ND	1	0 025	mg/Kg	02/11/03	SD
Toxaphene	ND	1	0 25	mg/Kg	02/11/03	SD

Surrogates		Units	Control Limits
DCB(Sur2)	112	%	55 - 130
TCMX (Sur1)	71	%	50 - 125

DLR = Detection limit for reporting purposes. ND = Not Detected below indicated detection limit. DF = Dilution Factor

Order #: 406098
Matrix: SOLID
Date Sampled: 01/13/2003
Time Sampled: 16:08
Sampled By:

Client: Dept. of Toxic Substances
Client Sample ID: CHER-14-2

Analyte	Result	DF	DLR	Units	Date/Analyst	
8081A - Organochlorine Pesticides by GC						
4,4-DDD	ND	1	0.005	mg/Kg	02/11/03	SD
4,4-DDE	ND	1	0.004	mg/Kg	02/11/03	SD
4,4-DDT	ND	1	0.005	mg/Kg	02/11/03	SD
Aldrin	ND	1	0.004	mg/Kg	02/11/03	SD
Alpha BHC	ND	1	0.002	mg/Kg	02/11/03	SD
Beta BHC	ND	1	0.003	mg/Kg	02/11/03	SD
Chlordane	ND	1	0.025	mg/Kg	02/11/03	SD
Delta BHC	ND	1	0.005	mg/Kg	02/11/03	SD
Dieldrin	ND	1	0.003	mg/Kg	02/11/03	SD
Endosulfan I	ND	1	0.004	mg/Kg	02/11/03	SD
Endosulfan II	ND	1	0.004	mg/Kg	02/11/03	SD
Endosulfan sulfate	ND	1	0.004	mg/Kg	02/11/03	SD
Endrin	ND	1	0.004	mg/Kg	02/11/03	SD
Endrin aldehyde	ND	1	0.004	mg/Kg	02/11/03	SD
Heptachlor	ND	1	0.004	mg/Kg	02/11/03	SD
Heptachlor epoxide	ND	1	0.003	mg/Kg	02/11/03	SD
Lindane	ND	1	0.003	mg/Kg	02/11/03	SD
Methoxychlor	ND	1	0.025	mg/Kg	02/11/03	SD
Toxaphene	ND	1	0.25	mg/Kg	02/11/03	SD

Surrogates		Units	Control Limits
DCB(Sur2)	85	%	55 - 130
TCMX (Sur1)	63	%	50 - 125

DLR = Detection limit for reporting purposes. ND = Not Detected below indicated detection limit. DF = Dilution Factor

Order #: 406099
Matrix: SOLID
Date Sampled: 01/13/2003
Time Sampled: 16:30
Sampled By:

Client: Dept. of Toxic Substances
Client Sample ID: CHER-13-2

Analyte	Result	DF	DLR	Units	Date/Analyst	
8081A - Organochlorine Pesticides by GC						
4,4-DDD	ND	1	0.005	mg/Kg	02/11/03	SD
4,4-DDE	0.010	1	0.004	mg/Kg	02/11/03	SD
4,4-DDT	0.013	1	0.005	mg/Kg	02/11/03	SD
Aldrin	ND	1	0.004	mg/Kg	02/11/03	SD
Alpha BHC	ND	1	0.002	mg/Kg	02/11/03	SD
Beta BHC	ND	1	0.003	mg/Kg	02/11/03	SD
Chlordane	0.095	1	0.025	mg/Kg	02/11/03	SD
Delta BHC	ND	1	0.005	mg/Kg	02/11/03	SD
Dieldrin	ND	1	0.003	mg/Kg	02/11/03	SD
Endosulfan I	ND	1	0.004	mg/Kg	02/11/03	SD
Endosulfan II	ND	1	0.004	mg/Kg	02/11/03	SD
Endosulfan sulfate	ND	1	0.004	mg/Kg	02/11/03	SD
Endrin	ND	1	0.004	mg/Kg	02/11/03	SD
Endrin aldehyde	ND	1	0.004	mg/Kg	02/11/03	SD
Heptachlor	ND	1	0.004	mg/Kg	02/11/03	SD
Heptachlor epoxide	ND	1	0.003	mg/Kg	02/11/03	SD
Lindane	ND	1	0.003	mg/Kg	02/11/03	SD
Methoxychlor	ND	1	0.025	mg/Kg	02/11/03	SD
Toxaphene	ND	1	0.25	mg/Kg	02/11/03	SD

Surrogates		Units	Control Limits
DCB(Sur2)	93	%	55 - 130
TCMX (Sur1)	52	%	50 - 125

DLR = Detection limit for reporting purposes. ND = Not Detected below indicated detection limit. DF = Dilution Factor

Order #: 406100
Matrix: SOLID
Date Sampled: 01/13/2003
Time Sampled: 16:36
Sampled By:

Client: Dept. of Toxic Substances
Client Sample ID: CHER-16-0 5

Analyte	Result	DF	DLR	Units	Date/Analyst	
8081A - Organochlorine Pesticides by GC						
4,4-DDD	ND	1	0.005	mg/Kg	02/11/03	SD
4,4-DDE	0 012	1	0 004	mg/Kg	02/11/03	SD
4,4-DDT	0 018	1	0 005	mg/Kg	02/11/03	SD
Aldrin	ND	1	0.004	mg/Kg	02/11/03	SD
Alpha BHC	ND	1	0.002	mg/Kg	02/11/03	SD
Beta BHC	ND	1	0 003	mg/Kg	02/11/03	SD
Chlordane	0 363	1	0 025	mg/Kg	02/11/03	SD
Delta BHC	ND	1	0 005	mg/Kg	02/11/03	SD
Dieldrin	ND	1	0 003	mg/Kg	02/11/03	SD
Endosulfan I	ND	1	0.004	mg/Kg	02/11/03	SD
Endosulfan II	ND	1	0.004	mg/Kg	02/11/03	SD
Endosulfan sulfate	ND	1	0 004	mg/Kg	02/11/03	SD
Endrin	ND	1	0 004	mg/Kg	02/11/03	SD
Endrin aldehyde	ND	1	0 004	mg/Kg	02/11/03	SD
Heptachlor	ND	1	0.004	mg/Kg	02/11/03	SD
Heptachlor epoxide	ND	1	0.003	mg/Kg	02/11/03	SD
Lindane	ND	1	0.003	mg/Kg	02/11/03	SD
Methoxychlor	ND	1	0.025	mg/Kg	02/11/03	SD
Toxaphene	ND	1	0 25	mg/Kg	02/11/03	SD

Surrogates		Units	Control Limits
DCB(Sur2)	111	%	55 - 130
TCMX (Sur1)	68	%	50 - 125

DLR = Detection limit for reporting purposes. ND = Not Detected below indicated detection limit. DF = Dilution Factor

Order #: 406101
Matrix: SOLID
Date Sampled: 01/13/2003
Time Sampled: 16:44
Sampled By:

Client: Dept. of Toxic Substances
Client Sample ID: CHER-16-2

Analyte	Result	DF	DLR	Units	Date/Analyst	
8081A - Organochlorine Pesticides by GC						
4,4-DDD	ND	1	0.005	mg/Kg	02/11/03	SD
4,4-DDE	ND	1	0.004	mg/Kg	02/11/03	SD
4,4-DDT	ND	1	0.005	mg/Kg	02/11/03	SD
Aldrin	ND	1	0.004	mg/Kg	02/11/03	SD
Alpha-BHC	ND	1	0.002	mg/Kg	02/11/03	SD
Beta BHC	ND	1	0.003	mg/Kg	02/11/03	SD
Chlordane	ND	1	0.025	mg/Kg	02/11/03	SD
Delta BHC	ND	1	0.005	mg/Kg	02/11/03	SD
Dieldrin	ND	1	0.003	mg/Kg	02/11/03	SD
Endosulfan I	ND	1	0.004	mg/Kg	02/11/03	SD
Endosulfan II	ND	1	0.004	mg/Kg	02/11/03	SD
Endosulfan sulfate	ND	1	0.004	mg/Kg	02/11/03	SD
Endrin	ND	1	0.004	mg/Kg	02/11/03	SD
Endrin aldehyde	ND	1	0.004	mg/Kg	02/11/03	SD
Heptachlor	ND	1	0.004	mg/Kg	02/11/03	SD
Heptachlor epoxide	ND	1	0.003	mg/Kg	02/11/03	SD
Lindane	ND	1	0.003	mg/Kg	02/11/03	SD
Methoxychlor	ND	1	0.025	mg/Kg	02/11/03	SD
Toxaphene	ND	1	0.25	mg/Kg	02/11/03	SD
Surrogates				Units	Control Limits	
DCB(Sur2)	91			%	55 - 130	
TCMX (Sur1)	51			%	50 - 125	

DLR = Detection limit for reporting purposes. ND = Not Detected below indicated detection limit. DF = Dilution Factor

Order #: 406102
Matrix: SOLID
Date Sampled: 01/13/2003
Time Sampled: 16:51
Sampled By:

Client: Dept. of Toxic Substances
Client Sample ID: CHER-15-2

Analyte	Result	DF	DLR	Units	Date/Analyst	
8081A - Organochlorine Pesticides by GC						
4,4-DDD	ND	1	0.005	mg/Kg	02/11/03	SD
4,4-DDE	ND	1	0.004	mg/Kg	02/11/03	SD
4,4-DDT	ND	1	0.005	mg/Kg	02/11/03	SD
Aldrin	ND	1	0.004	mg/Kg	02/11/03	SD
Alpha BHC	ND	1	0.002	mg/Kg	02/11/03	SD
Beta BHC	ND	1	0.003	mg/Kg	02/11/03	SD
Chlordane	ND	1	0.025	mg/Kg	02/11/03	SD
Delta BHC	ND	1	0.005	mg/Kg	02/11/03	SD
Dieldrin	ND	1	0.003	mg/Kg	02/11/03	SD
Endosulfan I	ND	1	0.004	mg/Kg	02/11/03	SD
Endosulfan II	ND	1	0.004	mg/Kg	02/11/03	SD
Endosulfan sulfate	ND	1	0.004	mg/Kg	02/11/03	SD
Endrin	ND	1	0.004	mg/Kg	02/11/03	SD
Endrin aldehyde	ND	1	0.004	mg/Kg	02/11/03	SD
Heptachlor	ND	1	0.004	mg/Kg	02/11/03	SD
Heptachlor epoxide	ND	1	0.003	mg/Kg	02/11/03	SD
Lindane	ND	1	0.003	mg/Kg	02/11/03	SD
Methoxychlor	ND	1	0.025	mg/Kg	02/11/03	SD
Toxaphene	ND	1	0.25	mg/Kg	02/11/03	SD

Surrogates		Units	Control Limits
DCB(Sur2)	98	%	55 - 130
TCMX (Sur1)	74	%	50 - 125

DLR = Detection limit for reporting purposes ND = Not Detected below indicated detection limit. DF = Dilution Factor

Order #: 406103
Matrix: WATER
Date Sampled: 01/13/2003
Time Sampled: 16:46
Sampled By:

Client: Dept. of Toxic Substances
Client Sample ID: CHER-R

Analyte	Result	DF	DLR	Units	Date/Analyst	
8081A - Organochlorine Pesticides by GC						
4,4-DDD	ND	1	0.06	ug/L	02/12/03	SD
4,4-DDE	ND	1	0.05	ug/L	02/12/03	SD
4,4-DDT	ND	1	0.06	ug/L	02/12/03	SD
Aldrin	ND	1	0.11	ug/L	02/12/03	SD
Alpha BHC	ND	1	0.04	ug/L	02/12/03	SD
Beta BHC	ND	1	0.03	ug/L	02/12/03	SD
Chlordane	ND	1	0.31	ug/L	02/12/03	SD
Delta BHC	ND	1	0.03	ug/L	02/12/03	SD
Dieldrin	ND	1	0.06	ug/L	02/12/03	SD
Endosulfan I	ND	1	0.03	ug/L	02/12/03	SD
Endosulfan II	ND	1	0.06	ug/L	02/12/03	SD
Endosulfan sulfate	ND	1	0.06	ug/L	02/12/03	SD
Endrin	ND	1	0.06	ug/L	02/12/03	SD
Endrin aldehyde	ND	1	0.13	ug/L	02/12/03	SD
Heptachlor	ND	1	0.08	ug/L	02/12/03	SD
Heptachlor epoxide	ND	1	0.05	ug/L	02/12/03	SD
Lindane	ND	1	0.03	ug/L	02/12/03	SD
Methoxychlor	ND	1	0.57	ug/L	02/12/03	SD
Toxaphene	ND	1	3.13	ug/L	02/12/03	SD

Surrogates		Units	Control Limits
DCB(Sur2)	80	%	55 - 125
TCMX (Sur1)	73	%	50 - 125

DLR = Detection limit for reporting purposes. ND = Not Detected below indicated detection limit. DF = Dilution Factor

Order #: 406104
Matrix: SOLID
Date Sampled:
Time Sampled:
Sampled By:

Client: Dept. of Toxic Substances
Client Sample ID: Laboratory Method Blank-S

Analyte	Result	DF	DLR	Units	Date/Analyst	
8081A - Organochlorine Pesticides by GC						
4,4-DDD	ND	1	0.005	mg/Kg	02/11/03	SD
4,4-DDE	ND	1	0.004	mg/Kg	02/11/03	SD
4,4-DDT	ND	1	0.005	mg/Kg	02/11/03	SD
Aldrin	ND	1	0.004	mg/Kg	02/11/03	SD
Alpha BHC	ND	1	0.002	mg/Kg	02/11/03	SD
Beta BHC	ND	1	0.003	mg/Kg	02/11/03	SD
Chlordane	ND	1	0.025	mg/Kg	02/11/03	SD
Delta BHC	ND	1	0.005	mg/Kg	02/11/03	SD
Dieldrin	ND	1	0.003	mg/Kg	02/11/03	SD
Endosulfan I	ND	1	0.004	mg/Kg	02/11/03	SD
Endosulfan II	ND	1	0.004	mg/Kg	02/11/03	SD
Endosulfan sulfate	ND	1	0.004	mg/Kg	02/11/03	SD
Endrin	ND	1	0.004	mg/Kg	02/11/03	SD
Endrin aldehyde	ND	1	0.004	mg/Kg	02/11/03	SD
Heptachlor	ND	1	0.004	mg/Kg	02/11/03	SD
Heptachlor epoxide	ND	1	0.003	mg/Kg	02/11/03	SD
Lindane	ND	1	0.003	mg/Kg	02/11/03	SD
Methoxychlor	ND	1	0.025	mg/Kg	02/11/03	SD
Toxaphene	ND	1	0.25	mg/Kg	02/11/03	SD

Surrogates		Units	Control Limits
DCB(Sur2)	93	%	55 - 130
TCMX (Sur1)	85	%	50 - 125

DLR = Detection limit for reporting purposes. ND = Not Detected below indicated detection limit. DF = Dilution Factor

Order #: 406108 **Client:** Dept. of Toxic Substances

Matrix: WATER **Client Sample ID:** Laboratory Method Blank-W

Date Sampled:

Time Sampled:

Sampled By:

Analyte	Result	DF	DLR	Units	Date/Analyst	
8081A - Organochlorine Pesticides by GC						
4,4-DDD	ND	1	0.06	ug/L	01/25/03	SD
4,4-DDE	ND	1	0.05	ug/L	01/25/03	SD
4,4-DDT	ND	1	0.06	ug/L	01/25/03	SD
Aldrin	ND	1	0.11	ug/L	01/25/03	SD
Alpha BHC	ND	1	0.04	ug/L	01/25/03	SD
Beta BHC	ND	1	0.03	ug/L	01/25/03	SD
Chlordane	ND	1	0.12	ug/L	01/25/03	SD
Delta BHC	ND	1	0.03	ug/L	01/25/03	SD
Dieldrin	ND	1	0.06	ug/L	01/25/03	SD
Endosulfan I	ND	1	0.03	ug/L	01/25/03	SD
Endosulfan II	ND	1	0.06	ug/L	01/25/03	SD
Endosulfan sulfate	ND	1	0.06	ug/L	01/25/03	SD
Endrin	ND	1	0.06	ug/L	01/25/03	SD
Endrin aldehyde	ND	1	0.13	ug/L	01/25/03	SD
Heptachlor	ND	1	0.08	ug/L	01/25/03	SD
Heptachlor epoxide	ND	1	0.05	ug/L	01/25/03	SD
Lindane	ND	1	0.03	ug/L	01/25/03	SD
Methoxychlor	ND	1	0.57	ug/L	01/25/03	SD
Toxaphene	ND	1	3.54	ug/L	01/25/03	SD

Surrogates		Units	Control Limits
DCB(Sur2)	120	%	55 - 125
TCMX (Sur1)	81	%	50 - 125

DLR = Detection limit for reporting purposes. ND = Not Detected below indicated detection limit, DF = Dilution Factor

Order #: 406175
Matrix: WATER
Date Sampled: 01/15/2003
Time Sampled: 16:50
Sampled By:

Client: Dept of Toxic Substances
Client Sample ID: CHER-EB

Analyte	Result	DF	DLR	Units	Date/Analyst	
8081A - Organochlorine Pesticides by GC						
4,4-DDD	ND	1	0.06	ug/L	02/12/03	SD
4,4-DDE	ND	1	0.05	ug/L	02/12/03	SD
4,4-DDT	ND	1	0.06	ug/L	02/12/03	SD
Aldrin	ND	1	0.11	ug/L	02/12/03	SD
Alpha BHC	ND	1	0.04	ug/L	02/12/03	SD
Beta BHC	ND	1	0.03	ug/L	02/12/03	SD
Chlordane	ND	1	0.12	ug/L	02/12/03	SD
Delta BHC	ND	1	0.03	ug/L	02/12/03	SD
Dieldrin	ND	1	0.06	ug/L	02/12/03	SD
Endosulfan I	ND	1	0.03	ug/L	02/12/03	SD
Endosulfan II	ND	1	0.06	ug/L	02/12/03	SD
Endosulfan sulfate	ND	1	0.06	ug/L	02/12/03	SD
Endrin	ND	1	0.06	ug/L	02/12/03	SD
Endrin aldehyde	ND	1	0.13	ug/L	02/12/03	SD
Heptachlor	ND	1	0.08	ug/L	02/12/03	SD
Heptachlor epoxide	ND	1	0.05	ug/L	02/12/03	SD
Lindane	ND	1	0.03	ug/L	02/12/03	SD
Methoxychlor	ND	1	0.57	ug/L	02/12/03	SD
Toxaphene	ND	1	3.54	ug/L	02/12/03	SD

Surrogates		Units	Control Limits
DCB(Sur2)	53	%	55 - 125
TCMX (Sur1)	43	%	50 - 125

DLR = Detection limit for reporting purposes. ND = Not Detected below indicated detection limit, DF = Dilution Factor

ASSOCIATED LABORATORIES

NARRATIVE

Date: March 27, 2003

Narrative for Lab Request LR 107723

Client Project Identification:
Project: Cherokee B
This narrative includes all samples as shown on the attached Lab Request final report

Analyses Requested:

- EPA 8081 – Organochlorine Pesticides by GC

Data Validation:

Holding Times
All EPA designated holding times were met

Calibration
Initial calibration criteria were met for all analytes. Initial and Continuing Calibration Check samples were run at the required frequency. All results were within required limits

Quality Control Samples
DCB surrogate recovery was outside limits in Samples #541712, due to matrix interference
Corrective Action: All Method Blanks, LCS, and MS/MSD were within control limits, and the bulk of surrogate recoveries conformed Therefore, the data was acceptable, and no corrective action was necessary The samples that were spiked contained significant levels of analytes, which most likely resulted in the observed interference.

Other Anomalies or Comments
The reporting limit (DLR) is adjusted if dilution of the sample is necessary.

ASSOCIATED LABORATORIES
806 North Batavia - Orange, California 92868 - 714/771-6900 *FAX 714/538-1209*

CLIENT Dept. of Toxic Substances (9290)
ATTN: Robbie Morris
1011 N. Grandview Ave
Glendale, CA 91201

LAB REQUEST 107723
REPORTED 03/21/2003
RECEIVED 03/11/2003

PROJECT Cherokee B

SUBMITTER Client

COMMENTS

This laboratory request covers the following listed samples which were analyzed for the parameters indicated on the attached Analytical Result Report. All analyses were conducted using the appropriate methods as indicated on the report. This cover letter is an integral part of the final report.

Order No.	Client Sample Identification
417499	CHER-B-1-0.5
417500	CHER-B-2-0.5
417501	CHER-B-3-0.5
417502	CHER-B-4-0.5
417503	CHER-B-5-0.5
417504	CHER-B-6-0.5
417505	CHER-B-7-0.5
417506	CHER-B-8-0.5
417507	CHER-B-9-0.5
417508	CHER-B-10-0.5
417509	CHER-B-11-0.5
417510	CHER-B-12-0.5
417511	CHER-B-13-0.5

Thank you for the opportunity to be of service to your company. Please feel free to call if there are any questions regarding this report or if we can be of further service.

ASSOCIATED LABORATORIES by,

Edward S. Behare, Ph.D.
Vice President

NOTE: Unless notified in writing, all samples will be discarded by appropriate disposal protocol 30 days from date reported.

The reports of the Associated Laboratories are confidential property of our clients and may not be reproduced or used for publication in part or in full without our written permission. This is for the mutual protection of the public, our clients and ourselves.

TESTING & CONSULTING
Chemical
Microbiological
Environmental

CLIENT Dept. of Toxic Substances (9290)
ATTN: Robbie Morris
1011 N. Grandview Ave.
Glendale, CA 91201

LAB REQUEST 107723

REPORTED 03/21/2003
RECEIVED 03/11/2003

PROJECT Cherokee B

SUBMITTER Client

COMMENTS

This laboratory request covers the following listed samples which were analyzed for the parameters indicated on the attached Analytical Result Report. All analyses were conducted using the appropriate methods as indicated on the report. This cover letter is an integral part of the final report.

Order No.	Client Sample Identification
417512	CHER-B-14-0.5
417513	CHER-B-15-0.5
417514	CHER-B-16-0.5
417515	CHER-B-17-0.5
417516	CHER-B-17-0.5D
417517	CHER-B-18-0.5
417518	CHER-B-19-0.5
417519	CHER-B-19-0.5D
417520	CHER-B-20-0.5
417521	Laboratory Method Blank

Thank you for the opportunity to be of service to your company. Please feel free to call if there are any questions regarding this report or if we can be of further service.

ASSOCIATED LABORATORIES by,

Edward S. Behare, Ph.D.
Vice President

NOTE: Unless notified in writing, all samples will be discarded by appropriate disposal protocol 30 days from date reported.

The reports of the Associated Laboratories are confidential property of our clients and may not be reproduced or used for publication in part or in full without our written permission. This is for the mutual protection of the public, our clients, and ourselves.

TESTING & CONSULTING
Chemical
Microbiological
Environmental

ASSOCIATED LABORATORIES
806 N. Batavia • Orange, CA 92868
(714) 771-6900 • Fax: (714) 538-1209

(9773

CHAIN OF CUSTODY RECORD

Date 3/10/03 Page 1 of 2

CLIENT DTSC
ADDRESS 1011 N. Grandview Ave.
Glendale, CA 91201

PROJECT MANAGER Robbie Morris
PHONE NUMBER 818-551-2941

Samples Intact Yes ✓ No ___
County Seals Intact Yes ___ No ✓
Sample Ambient ___ Cooled ✓ Frozen ___
Same Day ___ 24 Hr. ___
Regular ✓ 48 Hr. ___ see below

PROJECT NAME
Cherokee B

SAMPLERS: (Signature)

SAMPLE NUMBER	LOCATION DESCRIPTION	DATE	TIME	SAMPLE TYPE WATER	AIR	SOLID	NO OF CNTNRS	SUSP. CONTAM.	TESTS REQUIRED
CHER-B-1-0.5	3775 38th st	3/10/03	9:15			X	1		8081A
CHER-B-2-0.5			9:20						
CHER-B-3-0.5			9:25						
CHER-B-4-0.5			9:30						
CHER-B-5-0.5	3727 38th st		9:40						
CHER-B-6-0.5			9:45						
CHER-B-7-0.5			9:50						
CHER-B-8-0.5			9:55						
CHER-B-9-0.5	3902 Landis St		10:15						
CHER-B-10-0.5			10:18						
CHER-B-11-0.5			10:20						
CHER-B-12-0.5			10:24						
CHER-B-13-0.5	3729 39th st		10:30						

Relinquished by: (Signature)	Received by: (Signature)	Date/Time
		3-11-03 1:10
Relinquished by: (Signature)	Received by Laboratory for analysis: (Signature)	Date/Time
		3/11/03 4:20

Special Instructions:
5 day turnaround please Thanks

I hereby authorize the performance of the above indicated work.

DISTRIBUTION: White with report. Yellow to AL, Pink to Courier

ASSOCIATED LABORATORIES
806 N. Batavia • Orange, CA 92868
(714) 771-6900 • Fax: (714) 538-1209

107723

CHAIN OF CUSTODY RECORD

Date 3/10/03 Page 2 of 2

CLIENT DTSC
ADDRESS 1011 N. Grandview Ave
Glendale, CA 91201
PROJECT NAME Cherokee B

PROJECT MANAGER Robbie Morris
PHONE NUMBER 818-551-2941
SAMPLERS: (Signature) [signature]

Samples Intact Yes ✓ No ___
County Seals Intact Yes ___ No ✓
Sample Ambient ___ Cooled ✓ Frozen ___
Same Day ___ 24 Hr. ___
Regular ___ 48 Hr. ___ See below

SAMPLE NUMBER	LOCATION DESCRIPTION	DATE	TIME	SAMPLE TYPE WATER	AIR	SOLID	NO OF CNTNRS	SUSP. CONTAM.	TESTS REQUIRED
CHER-B-14-0.5	3729 39th St	3/10/03	10:31			X	1		8081A
CHER-B-15-0.5			10:40						
CHER-B-16-0.5			10:45						
CHER-B-17-0.5	3794 39th St		11:20						
CHER-B-17-0.5D	Duplicate		11:22						
CHER-B-18-0.5			11:30						
CHER-B-19-0.5			11:35						
CHER-B-19-0.5D	Duplicate		11:37						
CHER-B-20-0.5			11:45						

Relinquished by: (Signature) [signature] — Received by: (Signature) [signature] — Date/Time 3-11-03 / 10

Relinquished by: (Signature) [signature] — Received by Laboratory for analysis: (Signature) [signature] — Date/Time 4:20 3/11/03

Special Instructions: 5 day turnaround please

I hereby authorize the performance of the above indicated work.
[signature]

DISTRIBUTION: White with report, Yellow to AL, Pink to Courier

Order #: 417499 **Client:** Dept. of Toxic Substances
Matrix: SOLID **Client Sample ID:** CHER-B-1-0 5
Date Sampled: 03/10/2003
Time Sampled: 09:15
Sampled By:

Analyte	Result	DF	DLR	Units	Date/Analyst	
8081A - Organochlorine Pesticides by GC						
4,4-DDD	0 015	1	0 005	mg/Kg	03/19/03	RB
4,4-DDE	0.072	1	0 004	mg/Kg	03/19/03	RB
4,4-DDT	0.22	1	0.005	mg/Kg	03/19/03	RB
Aldrin	ND	1	0 004	mg/Kg	03/19/03	RB
Alpha BHC	ND	1	0 002	mg/Kg	03/19/03	RB
Beta BHC	ND	1	0 003	mg/Kg	03/19/03	RB
Chlordane	0 88	1	0.025	mg/Kg	03/19/03	RB
Delta BHC	ND	1	0.005	mg/Kg	03/19/03	RB
Dieldrin	0 050	1	0 003	mg/Kg	03/19/03	RB
Endosulfan I	ND	1	0.004	mg/Kg	03/19/03	RB
Endosulfan II	ND	1	0.004	mg/Kg	03/19/03	RB
Endosulfan sulfate	ND	1	0 004	mg/Kg	03/19/03	RB
Endrin	ND	1	0.004	mg/Kg	03/19/03	RB
Endrin aldehyde	ND	1	0.004	mg/Kg	03/19/03	RB
Heptachlor	ND	1	0.004	mg/Kg	03/19/03	RB
Heptachlor epoxide	ND	1	0.003	mg/Kg	03/19/03	RB
Lindane	ND	1	0.003	mg/Kg	03/19/03	RB
Methoxychlor	ND	1	0.025	mg/Kg	03/19/03	RB
Toxaphene	ND	1	0 250	mg/Kg	03/19/03	RB

Surrogates		Units	Control Limits
DCB(Sur2)	122	%	55 - 130
TCMX (Sur1)	109	%	50 - 125

DLR = Detection limit for reporting purposes, ND = Not Detected below indicated detection limit, DF = Dilution Factor

Order #: 417500
Matrix: SOLID
Date Sampled: 03/10/2003
Time Sampled: 09:20
Sampled By:

Client: Dept. of Toxic Substances
Client Sample ID: CHER-B-2-0.5

Analyte	Result	DF	DLR	Units	Date/Analyst	
8081A - Organochlorine Pesticides by GC						
4,4-DDD	ND	1	0.005	mg/Kg	03/19/03	RB
4,4-DDE	0.018	1	0.004	mg/Kg	03/19/03	RB
4,4-DDT	0.024	1	0.005	mg/Kg	03/19/03	RB
Aldrin	ND	1	0.004	mg/Kg	03/19/03	RB
Alpha BHC	ND	1	0.002	mg/Kg	03/19/03	RB
Beta BHC	ND	1	0.003	mg/Kg	03/19/03	RB
Chlordane	0.63	1	0.025	mg/Kg	03/19/03	RB
Delta BHC	ND	1	0.005	mg/Kg	03/19/03	RB
Dieldrin	ND	1	0.003	mg/Kg	03/19/03	RB
Endosulfan I	ND	1	0.004	mg/Kg	03/19/03	RB
Endosulfan II	ND	1	0.004	mg/Kg	03/19/03	RB
Endosulfan sulfate	ND	1	0.004	mg/Kg	03/19/03	RB
Endrin	ND	1	0.004	mg/Kg	03/19/03	RB
Endrin aldehyde	ND	1	0.004	mg/Kg	03/19/03	RB
Heptachlor	ND	1	0.004	mg/Kg	03/19/03	RB
Heptachlor epoxide	ND	1	0.003	mg/Kg	03/19/03	RB
Lindane	ND	1	0.003	mg/Kg	03/19/03	RB
Methoxychlor	ND	1	0.025	mg/Kg	03/19/03	RB
Toxaphene	ND	1	0.250	mg/Kg	03/19/03	RB

Surrogates		Units	Control Limits
DCB(Sur2)	94	%	55 - 130
TCMX (Sur1)	77	%	50 - 125

DLR = Detection limit for reporting purposes. ND = Not Detected below indicated detection limit, DF = Dilution Factor

Order #: 417501 **Client:** Dept. of Toxic Substances
Matrix: SOLID **Client Sample ID:** CHER-B-3-0 5
Date Sampled: 03/10/2003
Time Sampled: 09:25
Sampled By:

Analyte	Result	DF	DLR	Units	Date/Analyst	
8081A - Organochlorine Pesticides by GC						
4,4-DDD	0 017	1	0.005	mg/Kg	03/19/03	RB
4,4-DDE	0.038	1	0.004	mg/Kg	03/19/03	RB
4,4-DDT	0.17	1	0.005	mg/Kg	03/19/03	RB
Aldrin	ND	1	0.004	mg/Kg	03/19/03	RB
Alpha BHC	ND	1	0.002	mg/Kg	03/19/03	RB
Beta BHC	ND	1	0.003	mg/Kg	03/19/03	RB
Chlordane	0 32	1	0 025	mg/Kg	03/19/03	RB
Delta BHC	ND	1	0.005	mg/Kg	03/19/03	RB
Dieldrin	0 011	1	0.003	mg/Kg	03/19/03	RB
Endosulfan I	ND	1	0 004	mg/Kg	03/19/03	RB
Endosulfan II	ND	1	0.004	mg/Kg	03/19/03	RB
Endosulfan sulfate	ND	1	0 004	mg/Kg	03/19/03	RB
Endrin	ND	1	0.004	mg/Kg	03/19/03	RB
Endrin aldehyde	ND	1	0 004	mg/Kg	03/19/03	RB
Heptachlor	ND	1	0 004	mg/Kg	03/19/03	RB
Heptachlor epoxide	ND	1	0 003	mg/Kg	03/19/03	RB
Lindane	ND	1	0 003	mg/Kg	03/19/03	RB
Methoxychlor	ND	1	0.025	mg/Kg	03/19/03	RB
Toxaphene	ND	1	0.250	mg/Kg	03/19/03	RB

Surrogates		Units	Control Limits
DCB(Sur2)	129	%	55 - 130
TCMX (Sur1)	98	%	50 - 125

DLR = Detection limit for reporting purposes. ND = Not Detected below indicated detection limit, DF = Dilution Factor

Order #: 417502
Matrix: SOLID
Date Sampled: 03/10/2003
Time Sampled: 09:30
Sampled By:

Client: Dept. of Toxic Substances
Client Sample ID: CHER-B-4-0.5

Analyte	Result	DF	DLR	Units	Date/Analyst	
8081A - Organochlorine Pesticides by GC						
4,4-DDD	0.012	1	0.005	mg/Kg	03/19/03	RB
4,4-DDE	0.026	1	0.004	mg/Kg	03/19/03	RB
4,4-DDT	0.099	1	0.005	mg/Kg	03/19/03	RB
Aldrin	ND	1	0.004	mg/Kg	03/19/03	RB
Alpha BHC	ND	1	0.002	mg/Kg	03/19/03	RB
Beta BHC	ND	1	0.003	mg/Kg	03/19/03	RB
Chlordane	0.18	1	0.025	mg/Kg	03/19/03	RB
Delta BHC	ND	1	0.005	mg/Kg	03/19/03	RB
Dieldrin	0.010	1	0.003	mg/Kg	03/19/03	RB
Endosulfan I	ND	1	0.004	mg/Kg	03/19/03	RB
Endosulfan II	ND	1	0.004	mg/Kg	03/19/03	RB
Endosulfan sulfate	ND	1	0.004	mg/Kg	03/19/03	RB
Endrin	ND	1	0.004	mg/Kg	03/19/03	RB
Endrin aldehyde	ND	1	0.004	mg/Kg	03/19/03	RB
Heptachlor	ND	1	0.004	mg/Kg	03/19/03	RB
Heptachlor epoxide	ND	1	0.003	mg/Kg	03/19/03	RB
Lindane	ND	1	0.003	mg/Kg	03/19/03	RB
Methoxychlor	ND	1	0.025	mg/Kg	03/19/03	RB
Toxaphene	ND	1	0.250	mg/Kg	03/19/03	RB

Surrogates		Units	Control Limits
DCB(Sur2)	123	%	55 - 130
TCMX (Sur1)	111	%	50 - 125

DLR = Detection limit for reporting purposes. ND = Not Detected below indicated detection limit, DF = Dilution Factor

Order #: 417503 **Client:** Dept. of Toxic Substances
Matrix: SOLID **Client Sample ID:** CHER-B-S-0 5
Date Sampled: 03/10/2003
Time Sampled: 09:40
Sampled By:

Analyte	Result	DF	DLR	Units	Date/Analyst	
8081A - Organochlorine Pesticides by GC						
4,4-DDD	0.016	2	0.01	mg/Kg	03/19/03	RB
4,4-DDE	0.11	2	0.008	mg/Kg	03/19/03	RB
4,4-DDT	0.16	2	0.01	mg/Kg	03/19/03	RB
Aldrin	ND	2	0.008	mg/Kg	03/19/03	RB
Alpha BHC	ND	2	0.004	mg/Kg	03/19/03	RB
Beta BHC	ND	2	0.006	mg/Kg	03/19/03	RB
Chlordane	1.1	2	0.05	mg/Kg	03/19/03	RB
Delta BHC	ND	2	0.01	mg/Kg	03/19/03	RB
Dieldrin	0.018	2	0.006	mg/Kg	03/19/03	RB
Endosulfan I	ND	2	0.008	mg/Kg	03/19/03	RB
Endosulfan II	ND	2	0.008	mg/Kg	03/19/03	RB
Endosulfan sulfate	ND	2	0.008	mg/Kg	03/19/03	RB
Endrin	ND	2	0.008	mg/Kg	03/19/03	RB
Endrin aldehyde	ND	2	0.008	mg/Kg	03/19/03	RB
Heptachlor	ND	2	0.008	mg/Kg	03/19/03	RB
Heptachlor epoxide	ND	2	0.006	mg/Kg	03/19/03	RB
Lindane	ND	2	0.006	mg/Kg	03/19/03	RB
Methoxychlor	ND	2	0.05	mg/Kg	03/19/03	RB
Toxaphene	ND	2	0.5	mg/Kg	03/19/03	RB

Surrogates		Units	Control Limits
DCB(Sur2)	129	%	55 - 130
TCMX (Sur1)	104	%	50 - 125

DLR = Detection limit for reporting purposes. ND = Not Detected below indicated detection limit, DF = Dilution Factor

Order #: 417504 **Client:** Dept. of Toxic Substances
Matrix: SOLID **Client Sample ID:** CHER-B-6-0 5
Date Sampled: 03/10/2003
Time Sampled: 09:45
Sampled By:

Analyte	Result	DF	DLR	Units	Date/Analyst	
8081A - Organochlorine Pesticides by GC						
4,4-DDD	ND	2	0.01	mg/Kg	03/19/03	RB
4,4-DDE	0 021	2	0 008	mg/Kg	03/19/03	RB
4,4-DDT	0.039	2	0.01	mg/Kg	03/19/03	RB
Aldrin	ND	2	0.008	mg/Kg	03/19/03	RB
Alpha BHC	ND	2	0 004	mg/Kg	03/19/03	RB
Beta BHC	ND	2	0.006	mg/Kg	03/19/03	RB
Chlordane	0.99	2	0.05	mg/Kg	03/19/03	RB
Delta BHC	ND	2	0 01	mg/Kg	03/19/03	RB
Dieldrin	0 070	2	0 006	mg/Kg	03/19/03	RB
Endosulfan I	ND	2	0.008	mg/Kg	03/19/03	RB
Endosulfan II	ND	2	0.008	mg/Kg	03/19/03	RB
Endosulfan sulfate	ND	2	0.008	mg/Kg	03/19/03	RB
Endrin	ND	2	0 008	mg/Kg	03/19/03	RB
Endrin aldehyde	ND	2	0.008	mg/Kg	03/19/03	RB
Heptachlor	ND	2	0.008	mg/Kg	03/19/03	RB
Heptachlor epoxide	ND	2	0.006	mg/Kg	03/19/03	RB
Lindane	ND	2	0 006	mg/Kg	03/19/03	RB
Methoxychlor	ND	2	0 05	mg/Kg	03/19/03	RB
Toxaphene	ND	2	0.5	mg/Kg	03/19/03	RB

Surrogates		Units	Control Limits
DCB(Sur2)	92	%	55 - 130
TCMX (Sur1)	90	%	50 - 125

DLR = Detection limit for reporting purposes, ND = Not Detected below indicated detection limit, DF = Dilution Factor

Order #: 417505
Matrix: SOLID
Date Sampled: 03/10/2003
Time Sampled: 09:50
Sampled By:

Client: Dept. of Toxic Substances
Client Sample ID: CHER-B-7-0.5

Analyte	Result	DF	DLR	Units	Date/Analyst	
8081A - Organochlorine Pesticides by GC						
4,4-DDD	ND	5	0.025	mg/Kg	03/19/03	RB
4,4-DDE	0.037	5	0.02	mg/Kg	03/19/03	RB
4,4-DDT	0.085	5	0.025	mg/Kg	03/19/03	RB
Aldrin	ND	5	0.02	mg/Kg	03/19/03	RB
Alpha BHC	ND	5	0.01	mg/Kg	03/19/03	RB
Beta BHC	ND	5	0.015	mg/Kg	03/19/03	RB
Chlordane	4.2	5	0.125	mg/Kg	03/19/03	RB
Delta BHC	ND	5	0.025	mg/Kg	03/19/03	RB
Dieldrin	0.16	5	0.015	mg/Kg	03/19/03	RB
Endosulfan I	ND	5	0.02	mg/Kg	03/19/03	RB
Endosulfan II	ND	5	0.02	mg/Kg	03/19/03	RB
Endosulfan sulfate	ND	5	0.02	mg/Kg	03/19/03	RB
Endrin	ND	5	0.02	mg/Kg	03/19/03	RB
Endrin aldehyde	ND	5	0.02	mg/Kg	03/19/03	RB
Heptachlor	ND	5	0.02	mg/Kg	03/19/03	RB
Heptachlor epoxide	ND	5	0.015	mg/Kg	03/19/03	RB
Lindane	ND	5	0.015	mg/Kg	03/19/03	RB
Methoxychlor	ND	5	0.125	mg/Kg	03/19/03	RB
Toxaphene	ND	5	1.25	mg/Kg	03/19/03	RB

Surrogates		Units	Control Limits
DCB(Sur2)	93	%	55 - 130
TCMX (Sur1)	81	%	50 - 125

DLR = Detection limit for reporting purposes, ND = Not Detected below indicated detection limit, DF = Dilution Factor

Order #: 417506
Matrix: SOLID
Date Sampled: 03/10/2003
Time Sampled: 09:55
Sampled By:

Client: Dept. of Toxic Substances
Client Sample ID: CHER-B-8-0.5

Analyte	Result	DF	DLR	Units	Date/Analyst	
8081A - Organochlorine Pesticides by GC						
4,4-DDD	ND	2	0.01	mg/Kg	03/19/03	RB
4,4-DDE	0.022	2	0.008	mg/Kg	03/19/03	RB
4,4-DDT	0.065	2	0.01	mg/Kg	03/19/03	RB
Aldrin	ND	2	0.008	mg/Kg	03/19/03	RB
Alpha BHC	ND	2	0.004	mg/Kg	03/19/03	RB
Beta BHC	ND	2	0.006	mg/Kg	03/19/03	RB
Chlordane	0.82	2	0.05	mg/Kg	03/19/03	RB
Delta BHC	ND	2	0.01	mg/Kg	03/19/03	RB
Dieldrin	0.024	2	0.006	mg/Kg	03/19/03	RB
Endosulfan I	ND	2	0.008	mg/Kg	03/19/03	RB
Endosulfan II	ND	2	0.008	mg/Kg	03/19/03	RB
Endosulfan sulfate	ND	2	0.008	mg/Kg	03/19/03	RB
Endrin	ND	2	0.008	mg/Kg	03/19/03	RB
Endrin aldehyde	ND	2	0.008	mg/Kg	03/19/03	RB
Heptachlor	ND	2	0.008	mg/Kg	03/19/03	RB
Heptachlor epoxide	ND	2	0.006	mg/Kg	03/19/03	RB
Lindane	ND	2	0.006	mg/Kg	03/19/03	RB
Methoxychlor	ND	2	0.05	mg/Kg	03/19/03	RB
Toxaphene	ND	2	0.5	mg/Kg	03/19/03	RB

Surrogates		Units	Control Limits
DCB(Sur2)	133	%	55 - 130
TCMX (Sur1)	109	%	50 - 125

DLR = Detection limit for reporting purposes, ND = Not Detected below indicated detection limit, DF = Dilution Factor

Order #: 417507 **Client:** Dept. of Toxic Substances
Matrix: SOLID **Client Sample ID:** CHER-B-9-0.5
Date Sampled: 03/10/2003
Time Sampled: 10:15
Sampled By:

Analyte	Result	DF	DLR	Units	Date/Analyst	
8081A - Organochlorine Pesticides by GC						
4,4-DDD	ND	1	0.005	mg/Kg	03/19/03	RB
4,4-DDE	0.013	1	0.004	mg/Kg	03/19/03	RB
4,4-DDT	0.024	1	0.005	mg/Kg	03/19/03	RB
Aldrin	ND	1	0.004	mg/Kg	03/19/03	RB
Alpha BHC	ND	1	0.002	mg/Kg	03/19/03	RB
Beta BHC	ND	1	0.003	mg/Kg	03/19/03	RB
Chlordane	0.32	1	0.025	mg/Kg	03/19/03	RB
Delta BHC	ND	1	0.005	mg/Kg	03/19/03	RB
Dieldrin	0.020	1	0.003	mg/Kg	03/19/03	RB
Endosulfan I	ND	1	0.004	mg/Kg	03/19/03	RB
Endosulfan II	ND	1	0.004	mg/Kg	03/19/03	RB
Endosulfan sulfate	ND	1	0.004	mg/Kg	03/19/03	RB
Endrin	ND	1	0.004	mg/Kg	03/19/03	RB
Endrin aldehyde	ND	1	0.004	mg/Kg	03/19/03	RB
Heptachlor	ND	1	0.004	mg/Kg	03/19/03	RB
Heptachlor epoxide	ND	1	0.003	mg/Kg	03/19/03	RB
Lindane	ND	1	0.003	mg/Kg	03/19/03	RB
Methoxychlor	ND	1	0.025	mg/Kg	03/19/03	RB
Toxaphene	ND	1	0.250	mg/Kg	03/19/03	RB

Surrogates		Units	Control Limits
DCB(Sur2)	120	%	55 - 130
TCMX (Sur1)	102	%	50 - 125

DLR = Detection limit for reporting purposes, ND = Not Detected below indicated detection limit, DF = Dilution Factor

Order #: 417508 **Client:** Dept. of Toxic Substances
Matrix: SOLID **Client Sample ID:** CHER-B-10-0.5
Date Sampled: 03/10/2003
Time Sampled: 10:18
Sampled By:

Analyte	Result	DF	DLR	Units	Date/Analyst	
8081A - Organochlorine Pesticides by GC						
4,4-DDD	ND	2	0.01	mg/Kg	03/19/03	RB
4,4-DDE	0.049	2	0.008	mg/Kg	03/19/03	RB
4,4-DDT	0.061	2	0.01	mg/Kg	03/19/03	RB
Aldrin	ND	2	0.008	mg/Kg	03/19/03	RB
Alpha BHC	ND	2	0.004	mg/Kg	03/19/03	RB
Beta BHC	ND	2	0.006	mg/Kg	03/19/03	RB
Chlordane	0.33	2	0.05	mg/Kg	03/19/03	RB
Delta BHC	ND	2	0.01	mg/Kg	03/19/03	RB
Dieldrin	0.10	2	0.006	mg/Kg	03/19/03	RB
Endosulfan I	ND	2	0.008	mg/Kg	03/19/03	RB
Endosulfan II	ND	2	0.008	mg/Kg	03/19/03	RB
Endosulfan sulfate	ND	2	0.008	mg/Kg	03/19/03	RB
Endrin	ND	2	0.008	mg/Kg	03/19/03	RB
Endrin aldehyde	ND	2	0.008	mg/Kg	03/19/03	RB
Heptachlor	ND	2	0.008	mg/Kg	03/19/03	RB
Heptachlor epoxide	ND	2	0.006	mg/Kg	03/19/03	RB
Lindane	ND	2	0.006	mg/Kg	03/19/03	RB
Methoxychlor	ND	2	0.05	mg/Kg	03/19/03	RB
Toxaphene	ND	2	0.5	mg/Kg	03/19/03	RB

Surrogates		Units	Control Limits
DCB(Sur2)	113	%	55 - 130
TCMX (Sur1)	112	%	50 - 125

DLR = Detection limit for reporting purposes, ND = Not Detected below indicated detection limit, DF = Dilution Factor

Order #: 417509
Matrix: SOLID
Date Sampled: 03/10/2003
Time Sampled: 10:20
Sampled By:

Client: Dept of Toxic Substances
Client Sample ID: CHER-B-11-0 5

Analyte	Result	DF	DLR	Units	Date/Analyst	
8081A - Organochlorine Pesticides by GC						
4,4-DDD	ND	1	0 005	mg/Kg	03/19/03	RB
4,4-DDE	0 008	1	0 004	mg/Kg	03/19/03	RB
4,4-DDT	0 029	1	0.005	mg/Kg	03/19/03	RB
Aldrin	ND	1	0 004	mg/Kg	03/19/03	RB
Alpha BHC	ND	1	0.002	mg/Kg	03/19/03	RB
Beta BHC	ND	1	0.003	mg/Kg	03/19/03	RB
Chlordane	0.26	1	0 025	mg/Kg	03/19/03	RB
Delta BHC	ND	1	0.005	mg/Kg	03/19/03	RB
Dieldrin	0 010	1	0.003	mg/Kg	03/19/03	RB
Endosulfan I	ND	1	0.004	mg/Kg	03/19/03	RB
Endosulfan II	ND	1	0 004	mg/Kg	03/19/03	RB
Endosulfan sulfate	ND	1	0.004	mg/Kg	03/19/03	RB
Endrin	ND	1	0.004	mg/Kg	03/19/03	RB
Endrin aldehyde	ND	1	0.004	mg/Kg	03/19/03	RB
Heptachlor	ND	1	0 004	mg/Kg	03/19/03	RB
Heptachlor epoxide	ND	1	0 003	mg/Kg	03/19/03	RB
Lindane	ND	1	0 003	mg/Kg	03/19/03	RB
Methoxychlor	ND	1	0 025	mg/Kg	03/19/03	RB
Toxaphene	ND	1	0 250	mg/Kg	03/19/03	RB

Surrogates		Units	Control Limits
DCB(Sur2)	99	%	55 - 130
TCMX (Sur1)	109	%	50 - 125

DLR = Detection limit for reporting purposes, ND = Not Detected below indicated detection limit, DF = Dilution Factor

Order #: 417510
Matrix: SOLID
Date Sampled: 03/10/2003
Time Sampled: 10:24
Sampled By:

Client: Dept. of Toxic Substances
Client Sample ID: CHER-B-12-0.5

Analyte	Result	DF	DLR	Units	Date/Analyst	
8081A - Organochlorine Pesticides by GC						
4,4-DDD	ND	1	0.005	mg/Kg	03/19/03	RB
4,4-DDE	0.057	1	0.004	mg/Kg	03/19/03	RB
4,4-DDT	0.012	1	0.005	mg/Kg	03/19/03	RB
Aldrin	ND	1	0.004	mg/Kg	03/19/03	RB
Alpha BHC	ND	1	0.002	mg/Kg	03/19/03	RB
Beta BHC	ND	1	0.003	mg/Kg	03/19/03	RB
Chlordane	0.050	1	0.025	mg/Kg	03/19/03	RB
Delta BHC	ND	1	0.005	mg/Kg	03/19/03	RB
Dieldrin	ND	1	0.003	mg/Kg	03/19/03	RB
Endosulfan I	ND	1	0.004	mg/Kg	03/19/03	RB
Endosulfan II	ND	1	0.004	mg/Kg	03/19/03	RB
Endosulfan sulfate	ND	1	0.004	mg/Kg	03/19/03	RB
Endrin	ND	1	0.004	mg/Kg	03/19/03	RB
Endrin aldehyde	ND	1	0.004	mg/Kg	03/19/03	RB
Heptachlor	ND	1	0.004	mg/Kg	03/19/03	RB
Heptachlor epoxide	ND	1	0.003	mg/Kg	03/19/03	RB
Lindane	ND	1	0.003	mg/Kg	03/19/03	RB
Methoxychlor	ND	1	0.025	mg/Kg	03/19/03	RB
Toxaphene	ND	1	0.250	mg/Kg	03/19/03	RB

Surrogates		Units	Control Limits
DCB(Sur2)	105	%	55 - 130
TCMX (Sur1)	114	%	50 - 125

DLR = Detection limit for reporting purposes, ND = Not Detected below indicated detection limit, DF = Dilution Factor

Order #: 417511 **Client:** Dept of Toxic Substances
Matrix: SOLID **Client Sample ID:** CHER-B-13-0 5
Date Sampled: 03/10/2003
Time Sampled: 10:30
Sampled By:

Analyte	Result	DF	DLR	Units	Date/Analyst	
8081A - Organochlorine Pesticides by GC						
4,4-DDD	0.13	2	0.01	mg/Kg	03/19/03	RB
4,4-DDE	2.7	2	0 008	mg/Kg	03/19/03	RB
4,4-DDT	2.6	2	0 01	mg/Kg	03/19/03	RB
Aldrin	ND	2	0 008	mg/Kg	03/19/03	RB
Alpha BHC	ND	2	0.004	mg/Kg	03/19/03	RB
Beta BHC	ND	2	0 006	mg/Kg	03/19/03	RB
Chlordane	0.73	2	0 05	mg/Kg	03/19/03	RB
Delta BHC	ND	2	0.01	mg/Kg	03/19/03	RB
Dieldrin	ND	2	0 006	mg/Kg	03/19/03	RB
Endosulfan I	ND	2	0 008	mg/Kg	03/19/03	RB
Endosulfan II	ND	2	0 008	mg/Kg	03/19/03	RB
Endosulfan sulfate	ND	2	0.008	mg/Kg	03/19/03	RB
Endrin	ND	2	0.008	mg/Kg	03/19/03	RB
Endrin aldehyde	ND	2	0.008	mg/Kg	03/19/03	RB
Heptachlor	ND	2	0.008	mg/Kg	03/19/03	RB
Heptachlor epoxide	ND	2	0 006	mg/Kg	03/19/03	RB
Lindane	ND	2	0 006	mg/Kg	03/19/03	RB
Methoxychlor	ND	2	0 05	mg/Kg	03/19/03	RB
Toxaphene	ND	2	0 5	mg/Kg	03/19/03	RB
Surrogates				**Units**	**Control Limits**	
DCB(Sur2)	93			%	55 - 130	
TCMX (Sur1)	99			%	50 - 125	

DLR = Detection limit for reporting purposes. ND = Not Detected below indicated detection limit, DF = Dilution Factor

Order #: 417512
Matrix: SOLID
Date Sampled: 03/10/2003
Time Sampled: 10:31
Sampled By:

Client: Dept. of Toxic Substances
Client Sample ID: CHER-B-14-0 5

Analyte	Result	DF	DLR	Units	Date/Analyst	
8081A - Organochlorine Pesticides by GC						
4,4-DDD	ND	5	0.025	mg/Kg	03/19/03	RB
4,4-DDE	0.083	5	0.02	mg/Kg	03/19/03	RB
4,4-DDT	0 15	5	0.025	mg/Kg	03/19/03	RB
Aldrin	ND	5	0 02	mg/Kg	03/19/03	RB
Alpha BHC	ND	5	0 01	mg/Kg	03/19/03	RB
Beta BHC	ND	5	0.015	mg/Kg	03/19/03	RB
Chlordane	2.6	5	0.125	mg/Kg	03/19/03	RB
Delta BHC	ND	5	0.025	mg/Kg	03/19/03	RB
Dieldrin	ND	5	0.015	mg/Kg	03/19/03	RB
Endosulfan I	ND	5	0.02	mg/Kg	03/19/03	RB
Endosulfan II	ND	5	0 02	mg/Kg	03/19/03	RB
Endosulfan sulfate	ND	5	0 02	mg/Kg	03/19/03	RB
Endrin	ND	5	0 02	mg/Kg	03/19/03	RB
Endrin aldehyde	ND	5	0.02	mg/Kg	03/19/03	RB
Heptachlor	ND	5	0 02	mg/Kg	03/19/03	RB
Heptachlor epoxide	ND	5	0.015	mg/Kg	03/19/03	RB
Lindane	ND	5	0.015	mg/Kg	03/19/03	RB
Methoxychlor	ND	5	0.125	mg/Kg	03/19/03	RB
Toxaphene	ND	5	1.25	mg/Kg	03/19/03	RB

Surrogates		Units	Control Limits
DCB(Sur2)	154	%	55 - 130
TCMX (Sur1)	109	%	50 - 125

DLR = Detection limit for reporting purposes. ND = Not Detected below indicated detection limit, DF = Dilution Factor

Order #: 417513
Matrix: SOLID
Date Sampled: 03/10/2003
Time Sampled: 10:40
Sampled By:

Client: Dept. of Toxic Substances
Client Sample ID: CHER-B-15-0.5

Analyte	Result	DF	DLR	Units	Date/Analyst	
8081A - Organochlorine Pesticides by GC						
4,4-DDD	0.010	1	0.005	mg/Kg	03/19/03	RB
4,4-DDE	0.030	1	0.004	mg/Kg	03/19/03	RB
4,4-DDT	0.046	1	0.005	mg/Kg	03/19/03	RB
Aldrin	ND	1	0.004	mg/Kg	03/19/03	RB
Alpha BHC	ND	1	0.002	mg/Kg	03/19/03	RB
Beta BHC	ND	1	0.003	mg/Kg	03/19/03	RB
Chlordane	0.44	1	0.025	mg/Kg	03/19/03	RB
Delta BHC	ND	1	0.005	mg/Kg	03/19/03	RB
Dieldrin	0.012	1	0.003	mg/Kg	03/19/03	RB
Endosulfan I	ND	1	0.004	mg/Kg	03/19/03	RB
Endosulfan II	ND	1	0.004	mg/Kg	03/19/03	RB
Endosulfan sulfate	ND	1	0.004	mg/Kg	03/19/03	RB
Endrin	ND	1	0.004	mg/Kg	03/19/03	RB
Endrin aldehyde	ND	1	0.004	mg/Kg	03/19/03	RB
Heptachlor	ND	1	0.004	mg/Kg	03/19/03	RB
Heptachlor epoxide	ND	1	0.003	mg/Kg	03/19/03	RB
Lindane	ND	1	0.003	mg/Kg	03/19/03	RB
Methoxychlor	ND	1	0.025	mg/Kg	03/19/03	RB
Toxaphene	ND	1	0.250	mg/Kg	03/19/03	RB

Surrogates		Units	Control Limits
DCB(Sur2)	129	%	55 - 130
TCMX (Sur1)	112	%	50 - 125

DLR = Detection limit for reporting purposes. ND = Not Detected below indicated detection limit, DF = Dilution Factor

Order #: 417514
Matrix: SOLID
Date Sampled: 03/10/2003
Time Sampled: 10:45
Sampled By:

Client: Dept. of Toxic Substances
Client Sample ID: CHER-B-16-0 5

Analyte	Result	DF	DLR	Units	Date/Analyst	
8081A - Organochlorine Pesticides by GC						
4,4-DDD	0 009	1	0.005	mg/Kg	03/19/03	RB
4,4-DDE	0.025	1	0.004	mg/Kg	03/19/03	RB
4,4-DDT	0.021	1	0 005	mg/Kg	03/19/03	RB
Aldrin	ND	1	0.004	mg/Kg	03/19/03	RB
Alpha BHC	ND	1	0.002	mg/Kg	03/19/03	RB
Beta BHC	ND	1	0 003	mg/Kg	03/19/03	RB
Chlordane	ND	1	0:025	mg/Kg	03/19/03	RB
Delta BHC	ND	1	0.005	mg/Kg	03/19/03	RB
Dieldrin	0 009	1	0 003	mg/Kg	03/19/03	RB
Endosulfan I	ND	1	0.004	mg/Kg	03/19/03	RB
Endosulfan II	ND	1	0.004	mg/Kg	03/19/03	RB
Endosulfan sulfate	ND	1	0.004	mg/Kg	03/19/03	RB
Endrin	ND	1	0.004	mg/Kg	03/19/03	RB
Endrin aldehyde	ND	1	0.004	mg/Kg	03/19/03	RB
Heptachlor	ND	1	0.004	mg/Kg	03/19/03	RB
Heptachlor epoxide	ND	1	0.003	mg/Kg	03/19/03	RB
Lindane	ND	1	0.003	mg/Kg	03/19/03	RB
Methoxychlor	ND	1	0.025	mg/Kg	03/19/03	RB
Toxaphene	ND	1	0.250	mg/Kg	03/19/03	RB

Surrogates		Units	Control Limits
DCB(Sur2)	108	%	55 - 130
TCMX (Sur1)	113	%	50 - 125

DLR = Detection limit for reporting purposes. ND = Not Detected below indicated detection limit, DF = Dilution Factor

Order #: 417515
Matrix: SOLID
Date Sampled: 03/10/2003
Time Sampled: 11:20
Sampled By:

Client: Dept. of Toxic Substances
Client Sample ID: CHER-B-17-0.5

Analyte	Result	DF	DLR	Units	Date/Analyst	
8081A - Organochlorine Pesticides by GC						
4,4-DDD	0.006	1	0.005	mg/Kg	03/19/03	RB
4,4-DDE	0.009	1	0.004	mg/Kg	03/19/03	RB
4,4-DDT	0.035	1	0.005	mg/Kg	03/19/03	RB
Aldrin	ND	1	0.004	mg/Kg	03/19/03	RB
Alpha BHC	ND	1	0.002	mg/Kg	03/19/03	RB
Beta BHC	ND	1	0.003	mg/Kg	03/19/03	RB
Chlordane	0.43	1	0.025	mg/Kg	03/19/03	RB
Delta BHC	ND	1	0.005	mg/Kg	03/19/03	RB
Dieldrin	ND	1	0.003	mg/Kg	03/19/03	RB
Endosulfan I	ND	1	0.004	mg/Kg	03/19/03	RB
Endosulfan II	ND	1	0.004	mg/Kg	03/19/03	RB
Endosulfan sulfate	ND	1	0.004	mg/Kg	03/19/03	RB
Endrin	ND	1	0.004	mg/Kg	03/19/03	RB
Endrin aldehyde	ND	1	0.004	mg/Kg	03/19/03	RB
Heptachlor	ND	1	0.004	mg/Kg	03/19/03	RB
Heptachlor epoxide	ND	1	0.003	mg/Kg	03/19/03	RB
Lindane	ND	1	0.003	mg/Kg	03/19/03	RB
Methoxychlor	ND	1	0.025	mg/Kg	03/19/03	RB
Toxaphene	ND	1	0.250	mg/Kg	03/19/03	RB

Surrogates		Units	Control Limits
DCB(Sur2)	115	%	55 - 130
TCMX (Sur1)	108	%	50 - 125

DLR = Detection limit for reporting purposes, ND = Not Detected below indicated detection limit. DF = Dilution Factor

Order #: 417516
Matrix: SOLID
Date Sampled: 03/10/2003
Time Sampled: 11:22
Sampled By:

Client: Dept. of Toxic Substances
Client Sample ID: CHER-B-17-0.5D

Analyte	Result	DF	DLR	Units	Date/Analyst	
8081A - Organochlorine Pesticides by GC						
4,4-DDD	ND	1	0.005	mg/Kg	03/19/03	RB
4,4-DDE	0.009	1	0.004	mg/Kg	03/19/03	RB
4,4-DDT	0.026	1	0.005	mg/Kg	03/19/03	RB
Aldrin	ND	1	0.004	mg/Kg	03/19/03	RB
Alpha BHC	ND	1	0.002	mg/Kg	03/19/03	RB
Beta BHC	ND	1	0.003	mg/Kg	03/19/03	RB
Chlordane	0.39	1	0.025	mg/Kg	03/19/03	RB
Delta BHC	ND	1	0.005	mg/Kg	03/19/03	RB
Dieldrin	0.009	1	0.003	mg/Kg	03/19/03	RB
Endosulfan I	ND	1	0.004	mg/Kg	03/19/03	RB
Endosulfan II	ND	1	0.004	mg/Kg	03/19/03	RB
Endosulfan sulfate	ND	1	0.004	mg/Kg	03/19/03	RB
Endrin	ND	1	0.004	mg/Kg	03/19/03	RB
Endrin aldehyde	ND	1	0.004	mg/Kg	03/19/03	RB
Heptachlor	ND	1	0.004	mg/Kg	03/19/03	RB
Heptachlor epoxide	ND	1	0.003	mg/Kg	03/19/03	RB
Lindane	ND	1	0.003	mg/Kg	03/19/03	RB
Methoxychlor	ND	1	0.025	mg/Kg	03/19/03	RB
Toxaphene	ND	1	0.250	mg/Kg	03/19/03	RB

Surrogates		Units	Control Limits
DCB(Sur2)	111	%	55 - 130
TCMX (Sur1)	112	%	50 - 125

DLR = Detection limit for reporting purposes, ND = Not Detected below indicated detection limit, DF = Dilution Factor

Order #: 417517 **Client:** Dept. of Toxic Substances
Matrix: SOLID **Client Sample ID:** CHER-B-18-0.5
Date Sampled: 03/10/2003
Time Sampled: 11:30
Sampled By:

Analyte	Result	DF	DLR	Units	Date/Analyst	
8081A - Organochlorine Pesticides by GC						
4,4-DDD	0.019	2	0.01	mg/Kg	03/19/03	RB
4,4-DDE	0.038	2	0.008	mg/Kg	03/19/03	RB
4,4-DDT	0.070	2	0.01	mg/Kg	03/19/03	RB
Aldrin	ND	2	0.008	mg/Kg	03/19/03	RB
Alpha BHC	ND	2	0.004	mg/Kg	03/19/03	RB
Beta BHC	ND	2	0.006	mg/Kg	03/19/03	RB
Chlordane	0.76	2	0.05	mg/Kg	03/19/03	RB
Delta BHC	ND	2	0.01	mg/Kg	03/19/03	RB
Dieldrin	ND	2	0.006	mg/Kg	03/19/03	RB
Endosulfan I	ND	2	0.008	mg/Kg	03/19/03	RB
Endosulfan II	ND	2	0.008	mg/Kg	03/19/03	RB
Endosulfan sulfate	ND	2	0.008	mg/Kg	03/19/03	RB
Endrin	ND	2	0.008	mg/Kg	03/19/03	RB
Endrin aldehyde	ND	2	0.008	mg/Kg	03/19/03	RB
Heptachlor	ND	2	0.008	mg/Kg	03/19/03	RB
Heptachlor epoxide	ND	2	0.006	mg/Kg	03/19/03	RB
Lindane	0.013	2	0.006	mg/Kg	03/19/03	RB
Methoxychlor	ND	2	0.05	mg/Kg	03/19/03	RB
Toxaphene	ND	2	0.5	mg/Kg	03/19/03	RB

Surrogates		Units	Control Limits
DCB(Sur2)	116	%	55 - 130
TCMX (Sur1)	110	%	50 - 125

DLR = Detection limit for reporting purposes, ND = Not Detected below indicated detection limit. DF = Dilution Factor

Order #: 417518
Matrix: SOLID
Date Sampled: 03/10/2003
Time Sampled: 11:35
Sampled By:

Client: Dept. of Toxic Substances
Client Sample ID: CHER-B-19-0.5

Analyte	Result	DF	DLR	Units	Date/Analyst	
8081A - Organochlorine Pesticides by GC						
4,4-DDD	ND	1	0.005	mg/Kg	03/19/03	RB
4,4-DDE	0.009	1	0.004	mg/Kg	03/19/03	RB
4,4-DDT	0.024	1	0.005	mg/Kg	03/19/03	RB
Aldrin	ND	1	0.004	mg/Kg	03/19/03	RB
Alpha BHC	ND	1	0.002	mg/Kg	03/19/03	RB
Beta BHC	ND	1	0.003	mg/Kg	03/19/03	RB
Chlordane	0.21	1	0.025	mg/Kg	03/19/03	RB
Delta BHC	ND	1	0.005	mg/Kg	03/19/03	RB
Dieldrin	ND	1	0.003	mg/Kg	03/19/03	RB
Endosulfan I	ND	1	0.004	mg/Kg	03/19/03	RB
Endosulfan II	ND	1	0.004	mg/Kg	03/19/03	RB
Endosulfan sulfate	ND	1	0.004	mg/Kg	03/19/03	RB
Endrin	ND	1	0.004	mg/Kg	03/19/03	RB
Endrin aldehyde	ND	1	0.004	mg/Kg	03/19/03	RB
Heptachlor	ND	1	0.004	mg/Kg	03/19/03	RB
Heptachlor epoxide	ND	1	0.003	mg/Kg	03/19/03	RB
Lindane	ND	1	0.003	mg/Kg	03/19/03	RB
Methoxychlor	ND	1	0.025	mg/Kg	03/19/03	RB
Toxaphene	ND	1	0.250	mg/Kg	03/19/03	RB

Surrogates		Units	Control Limits
DCB(Sur2)	120	%	55 - 130
TCMX (Sur1)	105	%	50 - 125

DLR = Detection limit for reporting purposes, ND = Not Detected below indicated detection limit. DF = Dilution Factor

Order #: 417519 **Client:** Dept. of Toxic Substances
Matrix: SOLID **Client Sample ID:** CHER-B-19-0.5D
Date Sampled: 03/10/2003
Time Sampled: 11:37
Sampled By:

Analyte	Result	DF	DLR	Units	Date/Analyst	
8081A - Organochlorine Pesticides by GC						
4,4-DDD	ND	1	0.005	mg/Kg	03/19/03	RB
4,4-DDE	0.014	1	0.004	mg/Kg	03/19/03	RB
4,4-DDT	0.031	1	0.005	mg/Kg	03/19/03	RB
Aldrin	ND	1	0.004	mg/Kg	03/19/03	RB
Alpha BHC	ND	1	0.002	mg/Kg	03/19/03	RB
Beta BHC	ND	1	0.003	mg/Kg	03/19/03	RB
Chlordane	0.20	1	0.025	mg/Kg	03/19/03	RB
Delta BHC	ND	1	0.005	mg/Kg	03/19/03	RB
Dieldrin	ND	1	0.003	mg/Kg	03/19/03	RB
Endosulfan I	ND	1	0.004	mg/Kg	03/19/03	RB
Endosulfan II	ND	1	0.004	mg/Kg	03/19/03	RB
Endosulfan sulfate	ND	1	0.004	mg/Kg	03/19/03	RB
Endrin	ND	1	0.004	mg/Kg	03/19/03	RB
Endrin aldehyde	ND	1	0.004	mg/Kg	03/19/03	RB
Heptachlor	ND	1	0.004	mg/Kg	03/19/03	RB
Heptachlor epoxide	ND	1	0.003	mg/Kg	03/19/03	RB
Lindane	ND	1	0.003	mg/Kg	03/19/03	RB
Methoxychlor	ND	1	0.025	mg/Kg	03/19/03	RB
Toxaphene	ND	1	0.250	mg/Kg	03/19/03	RB

Surrogates		Units	Control Limits
DCB(Sur2)	96	%	55 - 130
TCMX (Sur1)	113	%	50 - 125

DLR = Detection limit for reporting purposes, ND = Not Detected below indicated detection limit, DF = Dilution Factor

Order #: 417520 **Client:** Dept. of Toxic Substances
Matrix: SOLID **Client Sample ID:** CHER-B-20-0.5
Date Sampled: 03/10/2003
Time Sampled: 11:45
Sampled By:

Analyte	Result	DF	DLR	Units	Date/Analyst	
8081A - Organochlorine Pesticides by GC						
4,4-DDD	ND	1	0.005	mg/Kg	03/19/03	RB
4,4-DDE	ND	1	0.004	mg/Kg	03/19/03	RB
4,4-DDT	0.011	1	0.005	mg/Kg	03/19/03	RB
Aldrin	ND	1	0.004	mg/Kg	03/19/03	RB
Alpha BHC	ND	1	0.002	mg/Kg	03/19/03	RB
Beta BHC	ND	1	0.003	mg/Kg	03/19/03	RB
Chlordane	0.030	1	0.025	mg/Kg	03/19/03	RB
Delta BHC	ND	1	0.005	mg/Kg	03/19/03	RB
Dieldrin	ND	1	0.003	mg/Kg	03/19/03	RB
Endosulfan I	ND	1	0.004	mg/Kg	03/19/03	RB
Endosulfan II	ND	1	0.004	mg/Kg	03/19/03	RB
Endosulfan sulfate	ND	1	0.004	mg/Kg	03/19/03	RB
Endrin	ND	1	0.004	mg/Kg	03/19/03	RB
Endrin aldehyde	ND	1	0.004	mg/Kg	03/19/03	RB
Heptachlor	ND	1	0.004	mg/Kg	03/19/03	RB
Heptachlor epoxide	ND	1	0.003	mg/Kg	03/19/03	RB
Lindane	ND	1	0.003	mg/Kg	03/19/03	RB
Methoxychlor	ND	1	0.025	mg/Kg	03/19/03	RB
Toxaphene	ND	1	0.250	mg/Kg	03/19/03	RB

Surrogates		Units	Control Limits
DCB(Sur2)	104	%	55 - 130
TCMX (Sur1)	110	%	50 - 125

DLR = Detection limit for reporting purposes, ND = Not Detected below indicated detection limit, DF = Dilution Factor

Order #: 417521 **Client:** Dept. of Toxic Substances
Matrix: SOLID **Client Sample ID:** Laboratory Method Blank
Date Sampled:
Time Sampled:
Sampled By:

Analyte	Result	DF	DLR	Units	Date/Analyst	
8081A - Organochlorine Pesticides by GC						
4,4-DDD	ND	1	0.005	mg/Kg	03/19/03	rb
4,4-DDE	ND	1	0.004	mg/Kg	03/19/03	rb
4,4-DDT	ND	1	0.005	mg/Kg	03/19/03	rb
Aldrin	ND	1	0.004	mg/Kg	03/19/03	rb
Alpha BHC	ND	1	0.002	mg/Kg	03/19/03	rb
Beta BHC	ND	1	0.003	mg/Kg	03/19/03	rb
Chlordane	ND	1	0.025	mg/Kg	03/19/03	rb
Delta BHC	ND	1	0.005	mg/Kg	03/19/03	rb
Dieldrin	ND	1	0.003	mg/Kg	03/19/03	rb
Endosulfan I	ND	1	0.004	mg/Kg	03/19/03	rb
Endosulfan II	ND	1	0.004	mg/Kg	03/19/03	rb
Endosulfan sulfate	ND	1	0.004	mg/Kg	03/19/03	rb
Endrin	ND	1	0.004	mg/Kg	03/19/03	rb
Endrin aldehyde	ND	1	0.004	mg/Kg	03/19/03	rb
Heptachlor	ND	1	0.004	mg/Kg	03/19/03	rb
Heptachlor epoxide	ND	1	0.003	mg/Kg	03/19/03	rb
Lindane	ND	1	0.003	mg/Kg	03/19/03	rb
Methoxychlor	ND	1	0.025	mg/Kg	03/19/03	rb
Toxaphene	ND	1	0.250	mg/Kg	03/19/03	rb

Surrogates		Units	Control Limits
DCB(Sur2)	120	%	55 - 130
TCMX (Sur1)	97	%	50 - 125

DLR = Detection limit for reporting purposes, ND = Not Detected below indicated detection limit, DF = Dilution Factor

Appendix C

Detailed Risk and Hazard Calculations

Incidental Ingestion of Soil
(Surface Soils, 0- to 0.5-feet bgs.)

COPC	Representative Soil Concentration (mg/kg)	Residential Lifetime Average Daily Intake (mg/kg-day)	Oral Slope Factor $(mg/kg\text{-}day)^{-1}$	Incremental Carcinogenic Risk		Residential Average Daily Intake (mg/kg-day)	Oral RfD (mg/kg-day)	Noncarcinogenic Hazard Quotient
Organochlorine Pesticides								
Aldrin	0.005	7.85E-09	1.70E+01	1.33E-07		6.40E-08	3.00E-05	2.13E-03
Chlordane	4.2	6.59E-06	1.30E+00	8.57E-06		5.38E-05	5.00E-04	1.08E-01
4,4'-DDD	0.705	1.11E-06	2.40E-01	2.66E-07		9.02E-06	5.00E-04	1.80E-02
4,4'-DDE	2.7	4.24E-06	3.40E-01	1.44E-06		3.46E-05	5.00E-04	6.91E-02
4,4'-DDT	5.26	8.26E-06	3.40E-01	2.81E-06		6.73E-05	5.00E-04	1.35E-01
Dieldrin	0.226	3.55E-07	1.60E+01	5.68E-06		2.89E-06	5.00E-05	5.79E-02
Heptachlor	0.004	6.28E-09	4.10E+00	2.57E-08		5.12E-08	5.00E-04	1.02E-04
Lindane (γ-Hexachlorocyclohexane)	0.013	2.04E-08	1.10E+00	2.25E-08		1.66E-07	3.00E-04	5.55E-04
			Total Risk	**1.9E-05**			**Hazard Index**	**3.9E-01**

Dermal Contact with Soil
(Surface Soils, 0- to 0.5-feet bgs.)

COPC	Representative Soil Concentration (mg/kg)	Dermal Absorption Factor	Residential Lifetime Average Daily Intake (mg/kg-day)	Dermal Slope Factor (mg/kg-day)$^{-1}$	Incremental Carcinogenic Risk	Residential Average Daily Intake (mg/kg-day)	Dermal RfD (mg/kg-day)	Noncarcinogenic Hazard Quotient
Organochlorine Pesticides								
Aldrin	0.005	0.05	9.28E-10	1.70E+01	1.58E-08	9.65E-09	3.00E-05	3.22E-04
Chlordane	4.2	0.05	7.79E-07	1.30E+00	1.01E-06	8.11E-06	5.00E-04	1.62E-02
4,4'-DDD	0.705	0.05	1.31E-07	2.40E-01	3.14E-08	1.36E-06	5.00E-04	2.72E-03
4,4'-DDE	2.7	0.05	5.01E-07	3.40E-01	1.70E-07	5.21E-06	5.00E-04	1.04E-02
4,4'-DDT	5.26	0.05	9.76E-07	3.40E-01	3.32E-07	1.02E-05	5.00E-04	2.03E-02
Dieldrin	0.226	0.05	4.19E-08	1.60E+01	6.71E-07	4.36E-07	5.00E-05	8.72E-03
Heptachlor	0.004	0.05	7.42E-10	4.10E+00	3.04E-09	7.72E-09	5.00E-04	1.54E-05
Lindane (γ–Hexachlorocyclohexane)	0.013	0.05	2.41E-09	1.10E+00	2.65E-09	2.51E-08	3.00E-04	8.36E-05
				Total Risk	**2.2E-06**		**Hazard Index**	**5.9E-02**

Inhalation of Suspended Soil Particulates
(Surface Soils, 0- to 0.5-feet bgs.)

COPC	Representative Soil Concentration (mg/kg)	Air Concentration of Suspended Particulate (mg/m^3)	Residential Lifetime Average Daily Intake (mg/kg-day)	Inhalation Slope Factor $(mg/kg\text{-}day)^{-1}$	Incremental Carcinogenic Risk	Residential Average Daily Intake (mg/kg-day)	Inhalation RfD (mg/kg-day)	Noncarcinogenic Hazard Quotient
Organochlorine Pesticides								
Aldrin	0.005	5.00E-12	7.45E-13	1.70E+01	1.27E-11	3.20E-12	3.00E-05	1.07E-07
Chlordane	4.2	4.20E-09	6.26E-10	1.20E+00	7.51E-10	2.68E-09	2.00E-04	1.34E-05
4,4'-DDD	0.705	7.05E-10	1.05E-10	2.40E-01	2.52E-11	4.50E-10	5.00E-04	9.01E-07
4,4'-DDE	2.7	2.70E-09	4.02E-10	3.40E-01	1.37E-10	1.73E-09	5.00E-04	3.45E-06
4,4'-DDT	5.26	5.26E-09	7.84E-10	3.40E-01	2.66E-10	3.36E-09	5.00E-04	6.72E-06
Dieldrin	0.226	2.26E-10	3.37E-11	1.60E+01	5.39E-10	1.44E-10	5.00E-05	2.89E-06
Heptachlor	0.004	4.00E-12	5.96E-13	4.10E+00	2.44E-12	2.56E-12	5.00E-04	5.11E-09
Lindane (γ–Hexachlorocyclohexane)	0.013	1.30E-11	1.94E-12	1.10E+00	2.13E-12	8.31E-12	3.00E-04	2.77E-08
				Total Risk	**1.7E-09**		**Hazard Index**	**2.8E-05**

Incidental Ingestion of Soil
(Subsurface Soils, 2-feet bgs.)

COPC	Representative Soil Concentration (mg/kg)	Residential Lifetime Average Daily Intake (mg/kg-day)	Oral Slope Factor $(mg/kg\text{-}day)^{-1}$	Incremental Carcinogenic Risk		Residential Average Daily Intake (mg/kg-day)	Oral RfD (mg/kg-day)	Noncarcinogenic Hazard Quotient
Organochlorine Pesticides								
Chlordane	0.214	3.36E-07	1.30E+00	4.37E-07		2.74E-06	5.00E-04	5.48E-03
4,4'-DDD	0.015	2.36E-08	2.40E-01	5.65E-09		1.92E-07	5.00E-04	3.84E-04
4,4'-DDE	0.144	2.26E-07	3.40E-01	7.69E-08		1.84E-06	5.00E-04	3.69E-03
4,4'-DDT	0.753	1.18E-06	3.40E-01	4.02E-07		9.64E-06	5.00E-04	1.93E-02
Dieldrin	0.193	3.03E-07	1.60E+01	4.85E-06		2.47E-06	5.00E-05	4.94E-02
			Total Risk	5.8E-06			Hazard Index	7.8E-02

Dermal Contact with Soil
(Subsurface Soils, 2-feet bgs.)

COPC	Representative Soil Concentration (mg/kg)	Dermal Absorption Factor	Residential Lifetime Average Daily Intake (mg/kg-day)	Dermal Slope Factor $(mg/kg\text{-}day)^{-1}$	Incremental Carcinogenic Risk		Residential Average Daily Intake (mg/kg-day)	Dermal RfD (mg/kg-day)	Noncarcinogenic Hazard Quotient
Organochlorine Pesticides									
Chlordane	0.214	0.05	3.97E-08	1.30E+00	5.16E-08		4.13E-07	5.00E-04	8.26E-04
4,4'-DDD	0.015	0.05	2.78E-09	2.40E-01	6.68E-10		2.90E-08	5.00E-04	5.79E-05
4,4'-DDE	0.144	0.05	2.67E-08	3.40E-01	9.08E-09		2.78E-07	5.00E-04	5.56E-04
4,4'-DDT	0.753	0.05	1.40E-07	3.40E-01	4.75E-08		1.45E-06	5.00E-04	2.91E-03
Dieldrin	0.193	0.05	3.58E-08	1.60E+01	5.73E-07		3.72E-07	5.00E-05	7.45E-03
				Total Risk	6.8E-07			Hazard Index	1.2E-02

Inhalation of Suspended Soil Particulates
(Subsurface Soils, 2-feet bgs.)

COPC	Representative Soil Concentration (mg/kg)	Air Concentration of Suspended Particulate (mg/m^3)	Residential Lifetime Average Daily Intake (mg/kg-day)	Inhalation Slope Factor $(mg/kg\text{-}day)^{-1}$	Incremental Carcinogenic Risk		Residential Average Daily Intake (mg/kg-day)	Inhalation RfD (mg/kg-day)	Noncarcinogenic Hazard Quotient
Organochlorine Pesticides									
Chlordane	0.214	2.14E-10	3.19E-11	1.20E+00	3.83E-11		1.37E-10	2.00E-04	6.84E-07
4,4'-DDD	0.015	1.50E-11	2.24E-12	2.40E-01	5.36E-13		9.59E-12	5.00E-04	1.92E-08
4,4'-DDE	0.144	1.44E-10	2.15E-11	3.40E-01	7.30E-12		9.20E-11	5.00E-04	1.84E-07
4,4'-DDT	0.753	7.53E-10	1.12E-10	3.40E-01	3.81E-11		4.81E-10	5.00E-04	9.62E-07
Dieldrin	0.193	1.93E-10	2.88E-11	1.60E+01	4.60E-10		1.23E-10	5.00E-05	2.47E-06
				Total Risk	**5.4E-10**			**Hazard Index**	**4.3E-06**