Division of Drinking Water – Actions on 1,4 Dioxane

DTSC Safer Consumer Products Workshop
June 28, 2019

Jeff O'Keefe, P.E., Chief
Southern California Section
Division of Drinking Water
State Water Resources Control Board

Acknowledgments

- US EPA websites and fact sheets
- Mark Bartson, DDW Technical Operations Section
- Brian Bernados, DDW Technical Operations Section
- Melissa Hall, DDW Technical Operations Section
- City Los Angeles Department of Water and Power and their consultants
- City Monterey Park and their consultants

1,4 Dioxane Background

- Used as a stabilizer for solvents, in particular 1,1,1-trichloroethane (TCA), and as a solvent
- Present in a number of industrial and commercial applications (paint strippers, dyes, greases, antifreeze and aircraft deicing fluids, and in some consumer products such as deodorants, shampoos, detergents and cosmetics)
- By- product in the manufacture of polyethylene terephthalate (PET) plastic
- US EPA classifies as a possible human carcinogen
- Exposure pathways - ingestion of drinking water, inhalations of vapors, and dermal contact

1,4 Dioxane Properties

- Short-lived in atmosphere due to photooxidation
- Highly soluble in water
- Migrates rapidly in groundwater
- Relatively resistant to biodegradation in subsurface
- Not volatile (low Henry's constant)
- Poorly adsorbed to soil particles
- Co-occurs in some chlorinated solvent plumes, and expands faster
- Difficult to treat – not amenable to more common drinking water treatment processes like air stripping or GAC adsorption

Occurrence of 1,4 Dioxane in Drinking Water

- CA Occurrence Data
  - Voluntary Monitoring (2003-2019)
  - 189 wells with confirmed detections above 1 ug/L (most in LA and OC)
  - Range of Detections: 1 ppb to 29.3 ug/L
- National Occurrence Data – EPA Unregulated Chemical Monitoring Rule Round 3 (2013-2015)
  - Samples from Large Public Water Systems serving over 10,000 population and selected smaller Public Water Systems
  - 36,810 samples analyzed (6,422 samples from CA)
  - 2.9% of samples above 0.35 ug/L (5.1% > 0.35 ug/L in CA)
  - 6.9% of Public Water Systems had a result above 0.35 ug/L
  - Present in surface water and groundwater samples

Occurrence of 1,4-dioxane in CA Drinking Water Sources

County	Number of Sources > 1 µg/L	Number of Public Water Systems >1 µg/L	Peak Concentration (µg/L)
Los Angeles	159	43	29.3
Monterey	1	1	3.9
Orange	28	12	26.7
Santa Barbara	1	1	16.0
TOTAL	189	57	

1. Source of info: SWRCB - DDW Water Quality database – Voluntary Monitoring 2002 - 2019
2. Confirmed Detections = more than one sample for the source > 1 ug/L
3. Includes active and standby wells
4. Not representative of delivered water quality
5. Not all public wells have been tested statewide

UCMR3 National Occurrence

Source: Eurofins Eaton Analytical – Dr. Andy Eaton

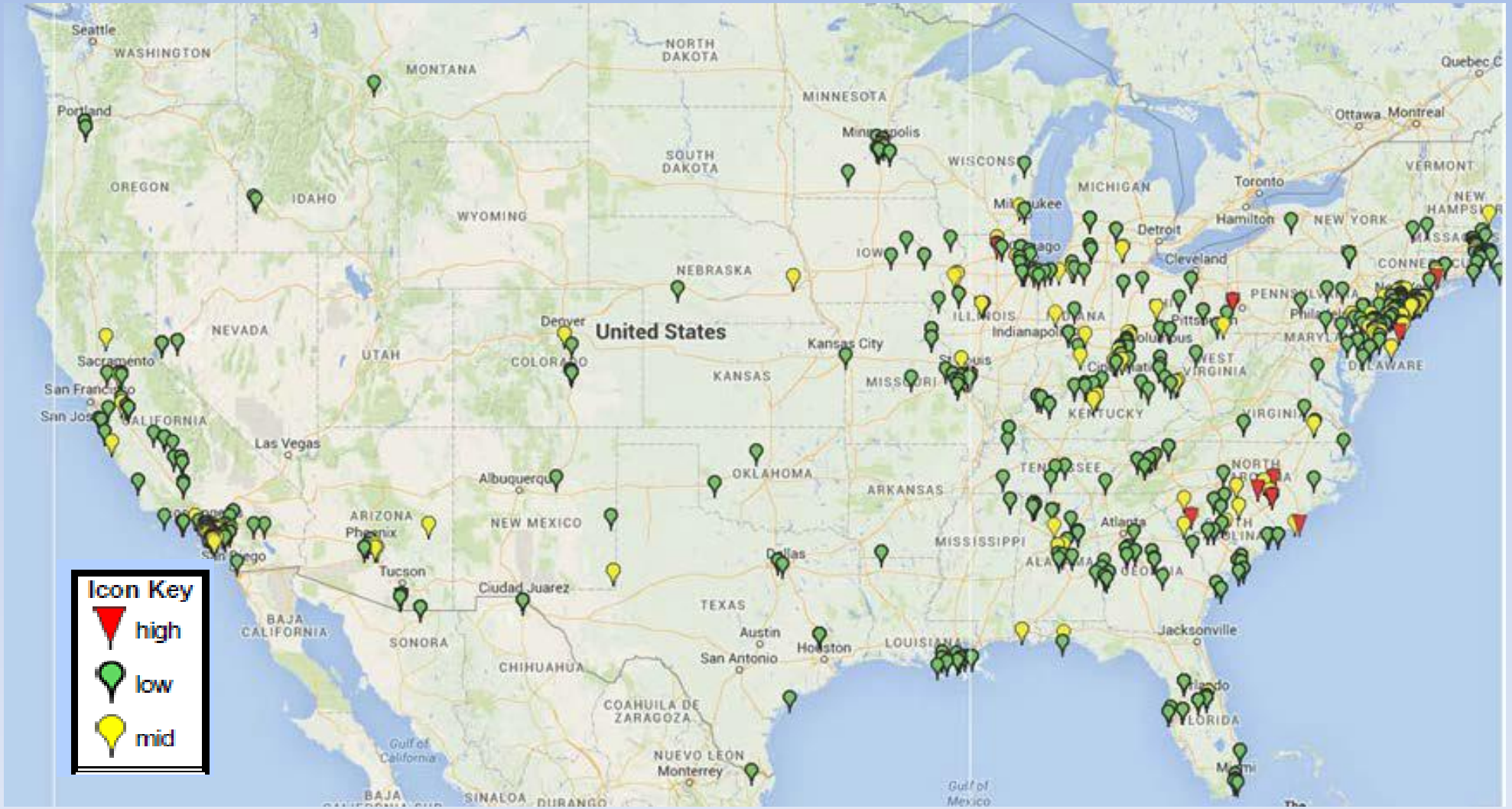

1,4-Dioxane Key Dates

Terminology - NL, RL, HA, MCL, PHG

- First detected in CA in groundwater in **1998**
- CA Notification Level (NL) of 3 µg/L established in **1998**, based on 1990 EPA Health Advisory of 3.5 ug/L
- CA revised NL to 1 ug/L in **2010**, based on revised EPA Health Advisory (HA) of 0.35 ug/L
  - NL is a health based guidance level in drinking water for chemicals lacking a Maximum Contaminant Level (MCL)
  - Corresponds to a 1 x 10-6 theoretical lifetime cancer risk
  - Response Level (RL) is concentration at which source recommended to be removed = 35 ug/L
- In January **2019**, SWRCB-DDW made request to CalEPA Office of Health Hazard Assessment (OEHHA) to establish a Public Health Goal (PHG) for 1,4 dioxane
  - Needed for formal rulemaking to establish a MCL
  - MCL to be established as close to PHG as practical considering analytical capability, treatability, and economic factors

State Drinking Water Guidelines

Source: US EPA Technical Fact Sheet – 1,4 Dioxane, November 2017

State	Guideline (µg/L)	Source
Alaska	77	AL DEC 2016
California	1	Cal/EPA 2011
Colorado	0.35	CDPHE 2017
Connecticut	3	CTDPH 2013
Delaware	6	DE DNR 1999
Florida	3.2	FDEP 2005
Indiana	7.8	IDEM 2015
Maine	4	MEDEP 2016
Massachusetts	0.3	MADEP 2004
Mississippi	6.09	MS DEQ 2002
New Hampshire	0.25	NH DES 2011
New Jersey	0.4	NJDEP 2015
North Carolina	3	NCDENR 2015
Pennsylvania	6.4	PADEP 2011
Texas	9.1	TCEQ 2016
Vermont	3	VTDEP 2016
Washington	0.438	WA ECY 2015
West Virginia	6.1	WV DEP 2009

A Federal MCL for 1,4 dioxane has not been established!

Drinking Water Treatment Projects to Address 1,4 Dioxane

US EPA Superfund Sites which address multiple contaminants (VOCs, Perchlorate, NDMA, Dioxane)

- San Fernando Valley Area 1, North Hollywood Operable Unit - LADWP (1 project pending, plus 3 additional projects outside EPA remedy area in construction or planning)
- San Gabriel Valley Area 1, South El Monte Operable Unit – City of Monterey Park (completed, permit pending)
- San Gabriel Valley Area 2, Baldwin Park Operable Unit – San Gabriel Valley Water Company (completed, permitted)
- San Gabriel Valley Area 2, Baldwin Park Operable Unit – Valley County Water District (2 projects completed, permitted)
- San Gabriel Valley Area 2, Baldwin Park Operable Unit – La Puente Valley County Water District (completed, permitted)

9 projects total

LADWP North Hollywood West Project

Los Angeles Department of Water & Power

1,4-Dioxane Source and Plume Identified

Hazen ARCADIS WorleyParsons

Los Angeles Department of Water & Power

NHW Treatment Process for 1,4-Dioxane

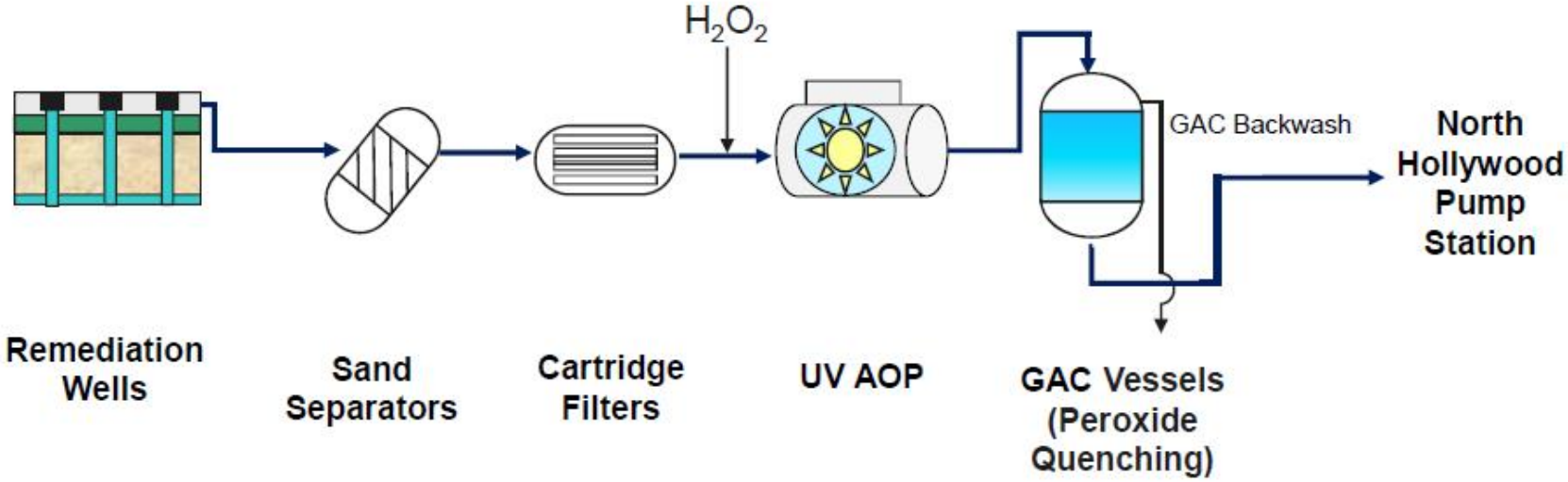

Hazen ARCADIS WorleyParsons

Monterey Park, LA County

1,4-dioxane in one of three wells up to 5 ppb

Figure 1: Hydrogen Peroxide injection point

City of Monterey Park Water Quality

Contaminant	**Raw Water (µg/L)**	**UV AOP Water (µg/L)**
Tetrachloroethylene (PCE)	108	<0.1
Trichloroethylene (TCE)	5.42	<0.1
1,4-Dioxane	2.73	<0.1

More on Monterey Park & LADWP

- AOP is effective for other VOCs at these sites
- TCE, PCE, or 1,1 DCE
- Peroxide dosages >> than potable reuse (>10 mg/L vs. 3 mg/L at OCWD)

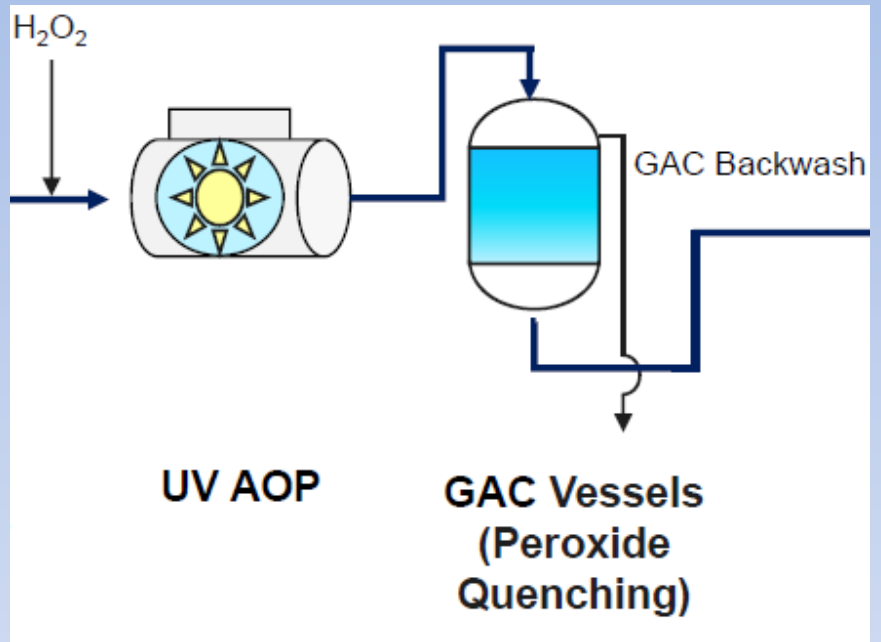

- Monterey Park & LADWP will have post treatment GAC for quenching excess peroxide
- For lower peroxide doses could use chlorine to quench

Hydroxyl Scavenger Demand

- Chloramines
- Total organic carbon (TOC)
- Nitrite: NO_2
- Bromide
- Alkalinity
- Natural organic matter (NOM)

Parameters will vary by location and over time

Treatment Costs

Capital Costs

- LADWP
  - North Hollywood West Wells: 7,400 gpm for a cost of $21.5 M
  - Rinaldi Toluca Wells: 17,145 gpm for a cost of $36.9 M
- Monterey Park
  - 7,400 gpm for a cost of $8.3 M

Operations and Maintenances Costs

- $$$ High energy costs (UV) and chemical cost (peroxide)

Treatment Considerations

- AOP is effective for reduction of 1,4-dioxane
- Water quality parameters are important
- Hydroxyl scavenger demand can be an issue
- Recommend pilot testing
- Recommend full-scale demonstration testing

1,4 Dioxane in Potable Reuse Projects

- Early draft Groundwater Recharge and Replenishment (GRRP) Regulations failed to address 1,4-dioxane
- In 2002 groundwater sources discovered to be contaminated near injection wells
  - N-nitrosodimethylamine (NDMA) & 1,4–Dioxane
- Rapid, effective response by wastewater and groundwater water management agencies
- GRRP regulations revised to include Full Advanced Treatment (Reverse Osmosis + Advanced Oxidation Process)
- GRRP subsurface injection and Surface Water Augmentation projects now require AOP (GRRP regs adopted 2014, SWA regs adopted 2018)

Advanced Treatment

Full Advanced Treatment is required for groundwater injection projects & surface water augmentation projects.

- Reverse osmosis
- Advanced oxidation (AOP) for
  - NDMA reduction
  - 1,4-dioxane reduction
  - Other unknown CECs
  - (Constituents of Emerging Concern such as pharmaceuticals and personal care products)

Reverse Osmosis

- RO is effective at removing large and/or ionic compounds
- Most large organic molecules with a MW >250 are over >90% removed, however,
- RO is less effective at removal of small non-ionic, neutral compounds
  - 1,4-dioxane (88)
  - NDMA (74)
  - Chloroform (119)

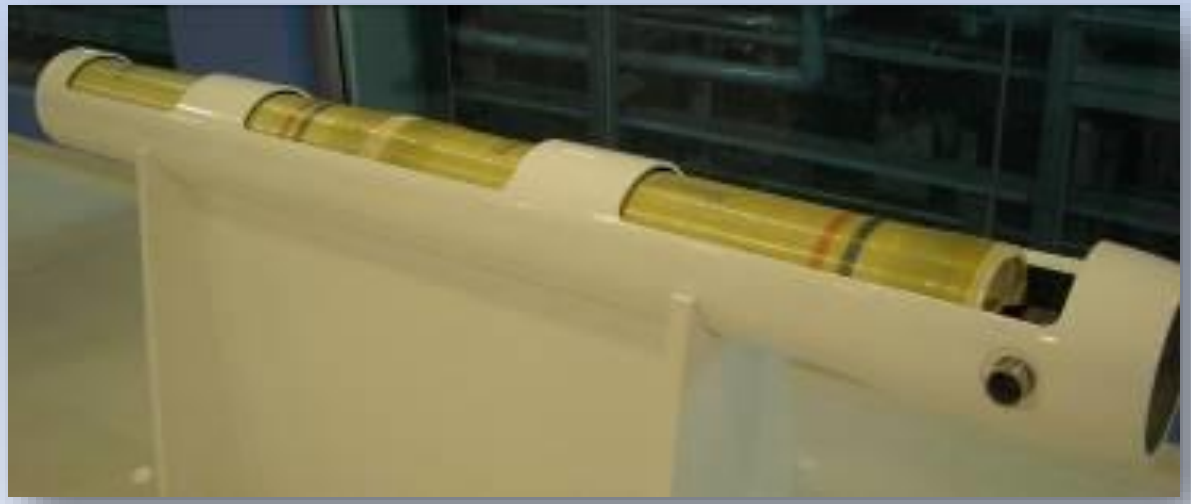

1,4-dioxane as an Indicator

- Potable reuse in CA requires meeting the 1,4-dioxane NL of 1 ug/L to prevent degradation of the aquifer
- UV alone at very high dose can photolyze NDMA and other nitrosamines effectively,
- But 1,4-dioxane and many other organics need AOP to enhance removal
- Experts agree generally that 1,4-dioxane is an appropriate indicator for other organics
- Indicator = an individual chemical that provides an indication of treatment process effectiveness

UV AOP & 1,4-dioxane

- The addition of H_2O_2, upstream of the high dose UV creates hydroxyl radicals to reduce 1,4-dioxane and other organics.

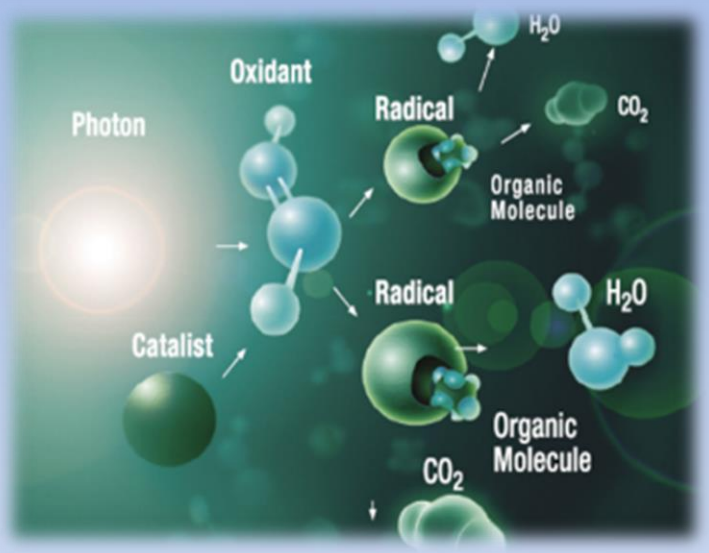

- Proven @ Orange County Water District, etc.
- NEW is utilization of free chlorine to create Cl* radicals and OH* radicals – can measure free ammonia & free chlorine residual

UV AOP / H_2O_2, & 1,4-dioxane

- Most reuse projects in CA add H_2O_2, to create hydroxyl radicals to meet the requirement of at least a 0.5-log reduction of 1,4 dioxane.
- BUT what is the optimum H_2O_2 dose?
- It is difficult to quantify hydroxyl radicals, as they are very reactive and short-lived.
- Orange County WD adds 3 ppm.
- Other approaches
  - Balance UV and oxidant

AOP Demonstration Test Requirements in GRRP Regs
(CCR Title 22 Section 60320.201 d)

- Test to show that AOP will provide a 0.5-log (69%) reduction of 1,4-dioxane
- Testing includes spiking of 1,4-dioxane
- Establish surrogate and/or operational parameters that show the 0.5-log 1,4-dioxane design criteria is being met
  - Dose
  - UV transmittance
- Capable of being monitored continuously
- On-going quarterly monitoring requirements to confirm meets all MCLs and NLs, including 1,4 dioxane

Resources

Waterboard Division of Drinking Water 1, 4 Dioxane webpage:
https://www.waterboards.ca.gov/drinking_water/certlic/drinkingwater/14-Dioxane.html

Waterboard Division of Drinking Water Recycled Water Regulations:
https://www.waterboards.ca.gov/drinking_water/certlic/drinkingwater/RecycledWater.html

Waterboard Division of Water Quality – GAMA Fact Sheet:
https://www.waterboards.ca.gov/water_issues/programs/gama/factsheets.html

USEPA Fact Sheet:
https://www.epa.gov/sites/production/files/2014-03/documents/ffrro_factsheet_contaminant_14-dioxane_january2014_final.pdf

Jeff O'Keefe
jeff.okeefe@waterboards.ca.gov
(818) 551-2068